QUOVA PERFORMANCE - STANDALONE

Performance Cove Fixture

ATTENTION: Please read all instructions BEFORE installation

- Product to be installed by a licensed electrician - Field modifications void warranty
- Use only with Class 2 power supply unit — Compatible for use with QTL power supplies
- Fixture with pre-installed rotatable Plastic Clip, to be installed in existing coves
- Input Voltage: 24VDC
- Diagrams for representation only and not to scale.

METHODS OF INSTALLATION

LIGHT MODULE CONFIGURATION OPTIONS

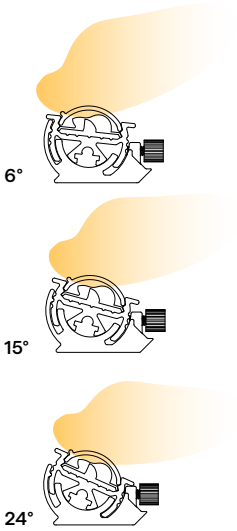

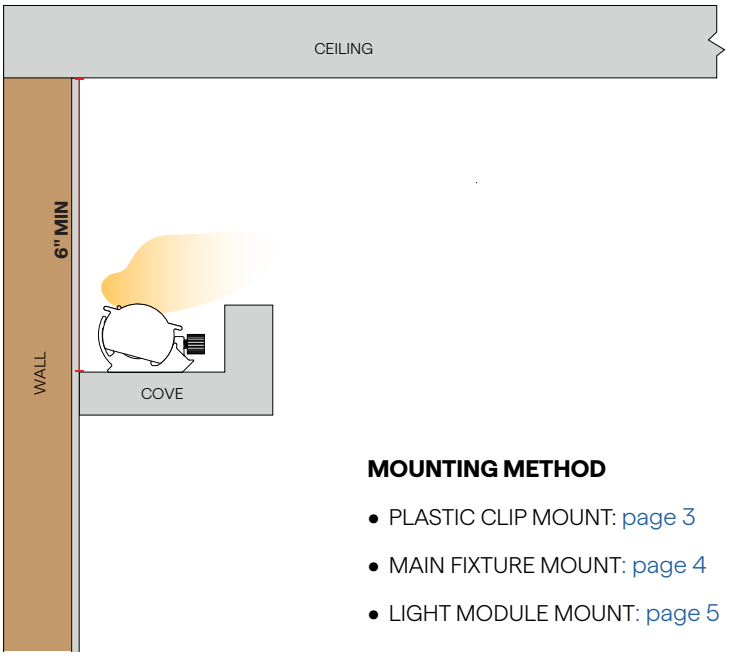

MOUNTING METHOD

- PLASTIC CLIP MOUNT: page 3
- MAIN FIXTURE MOUNT: page 4
- LIGHT MODULE MOUNT: page 5

© 2026 QTL. All rights reserved | 155 Hill St. Milford, CT 06460 | 203-367-8777 | sales@QTL.lighting | QTL.lighting

QUOVA PERFORMANCE - STANDALONE

Performance Cove Fixture

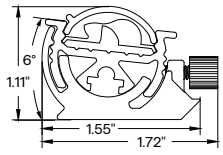

Profile of Light Module
at 6 degrees

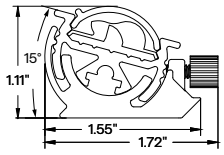

Profile of Light Module
at 15 degrees

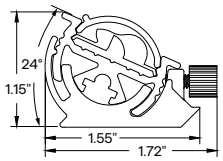

Profile of Light Module
at 24 degrees

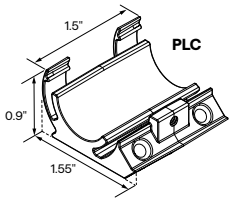

Light Module Mounting Clip
2 pcs for each fixture less than 5'
3 pcs for each fixture longer than 5'

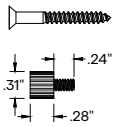

Standalone Mounting Screw
No.4 x 1" Long, Phillips Flat
Head Wood Screw
Offered 2 per Plastic Clip

Knurled Head Thumb Screw
Pre-installed to Plastic Clip

COMPONENTS & HARDWARE

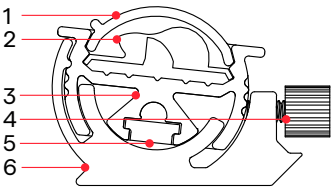

1. Secondary Optic (Dust Cover)
2. Optic
3. Light Module
4. Locking Screw
5. Inline Bracket
6. Plastic Clip

A - **Seamless Connector**: Use at the end of fixture for wires to come out and pass through below the fixture

B - **Endcap**: used to close the end of the fixture housing extrusion

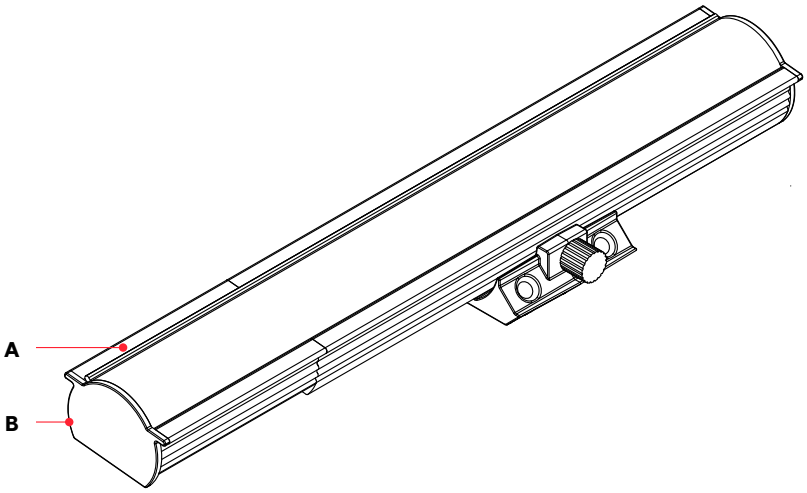

A - Seamless Connector

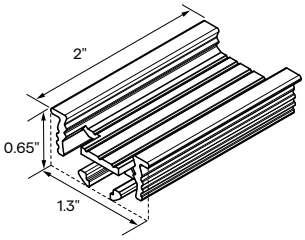

B - Endcap

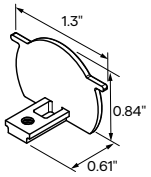

© 2026 QTL. All rights reserved | 155 Hill St. Milford, CT 06460 | 203-367-8777 | sales@QTL.lighting | QTL.lighting

QUOVA PERFORMANCE - STANDALONE

Performance Cove Fixture

MOUNTING METHOD: **PLASTIC CLIPS**

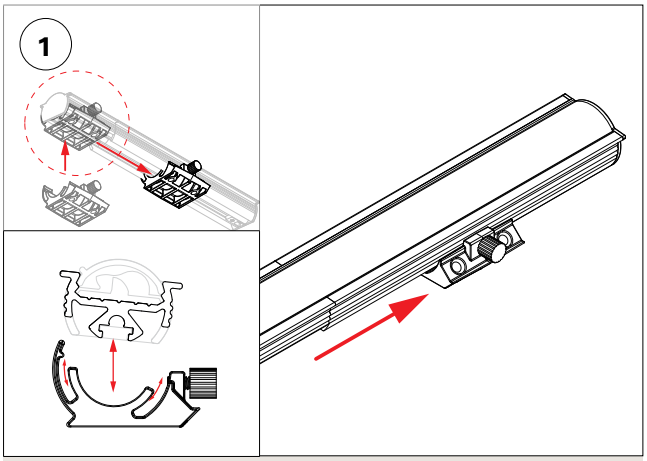

- Snap in plastic clips from the bottom of the seamless connector, then slide them to the fixture's main body.
- Insert 2 clips for fixtures shorter than 5',
  Insert 3 clips for fixtures longer than 5'

© 2026 QTL. All rights reserved | 155 Hill St. Milford, CT 06460 | 203-367-8777 | sales@QTL.lighting | QTL.lighting

QUOVA PERFORMANCE - STANDALONE

Performance Cove Fixture

MOUNTING METHOD: **MAIN FIXTURE MOUNT**

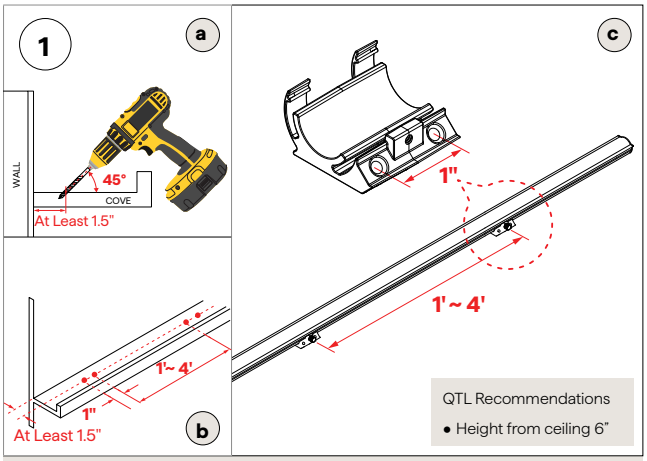

Pre-Drill Pilot Holes For #4 Screws:

a: Draw a reference line to be at least 1.5" Far from the back wall.

b: Plastic clips should be between 1' and 4' from each other and located towards the center of the fixture length.

c: On the reference line, pre-drill two 45° pilot holes at a 1" spacing for each plastic clip.

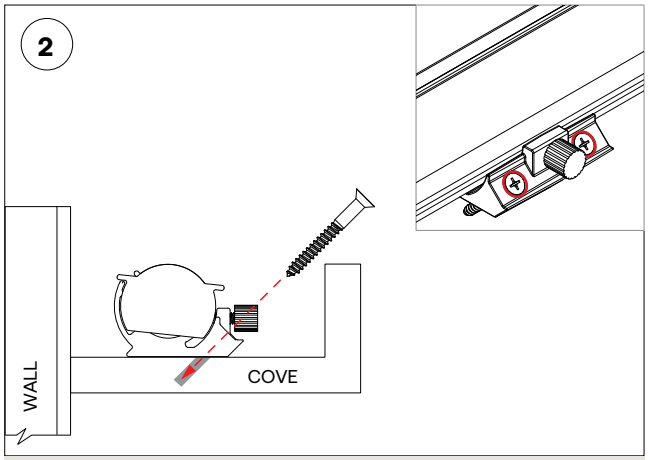

- Slide and move the plastic clip to match the pilot hole positions, then install mounting screws at 45° angle.

© 2026 QTL. All rights reserved | 155 Hill St. Milford, CT 06460 | 203-367-8777 | sales@QTL.lighting | QTL.lighting

MOUNTING METHOD: **LIGHT MODULE MOUNT**

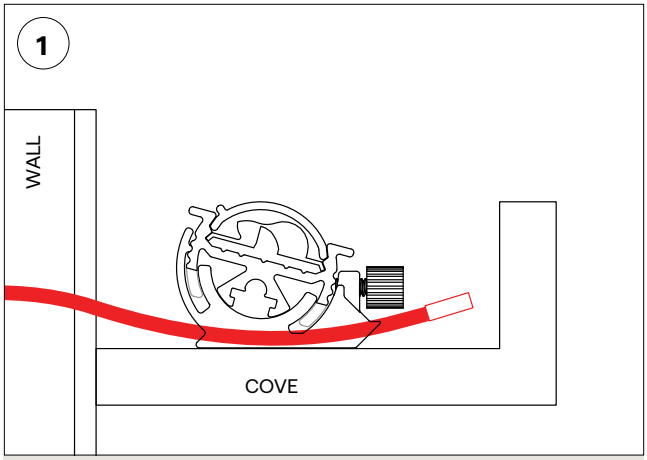

Run the power supply wire **only under** the seamless connector.

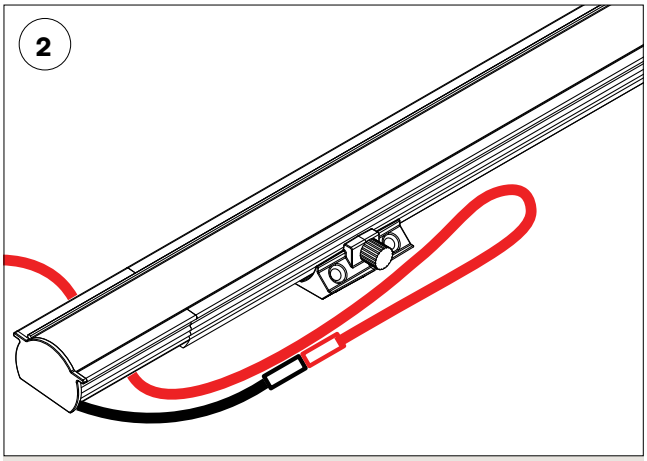

Make the wire connection to the light module wires.

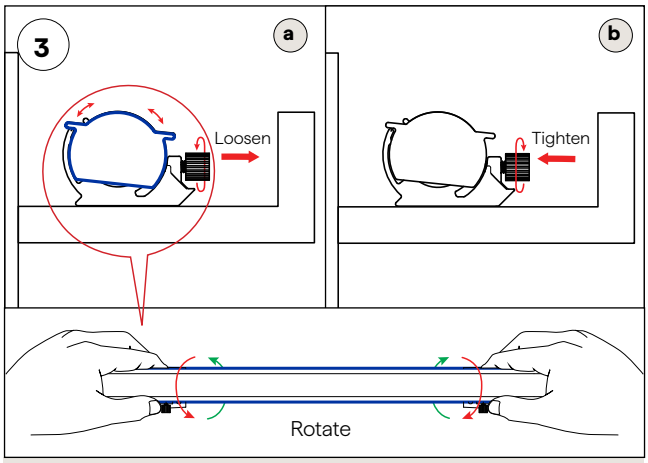

Adjust Rotate Angles:

a. Loosen the thumb screw and press on the inner fixture's flanges to rotate.

b. Tighten the thumb screw to lock the fixture.

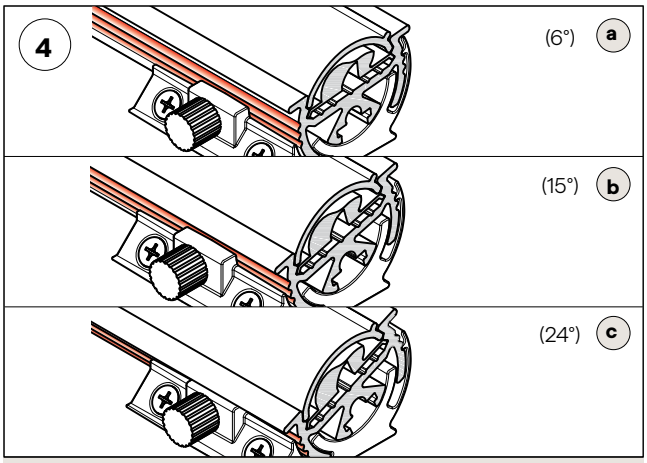

Adjust the light module to the desired position:
Using The Plastic Clip's shoulder and the Light Module's grooves as visual reference

a. Light module at 6 degrees (6°).

b. Light module at 15 degrees (15°).

c. Light module at 24 degrees (24°).

© 2026 QTL. All rights reserved | 155 Hill St. Milford, CT 06460 | 203-367-8777 | sales@QTL.lighting | QTL.lighting