LUME

Q-CAP HANDLING INSTRUCTIONS

WARNING: FRAGILE

Flexible fixtures contain sensitive electronics, requiring careful handling and installation to preserve their warranty. When unpacking flexible fixtures, handle them gently and test all fixtures upon receiving.

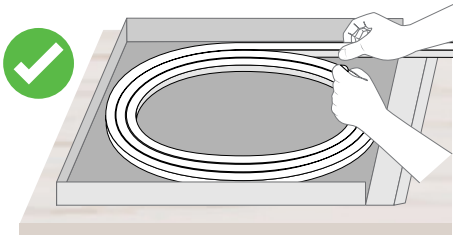

Keep the fixtures flat and supported when removing them from the box. Unroll them carefully on a flat surface and do not bend them against the intended bend direction.

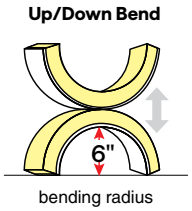

This LUME fixture can only be up and down bent. Do not bend the fixture more than a 6" radius.

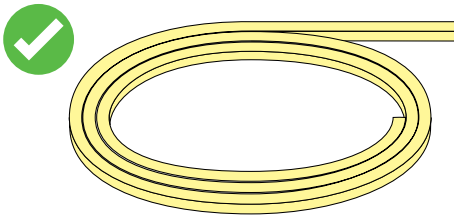

Powering the fixtures prior to installing will warm them up and make them more flexible, preventing damage.

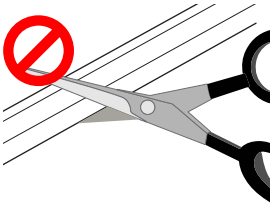

Only FC fixtures are field cuttable. Do not attempt to cut non-FC fixtures. Field modifications void warranty.

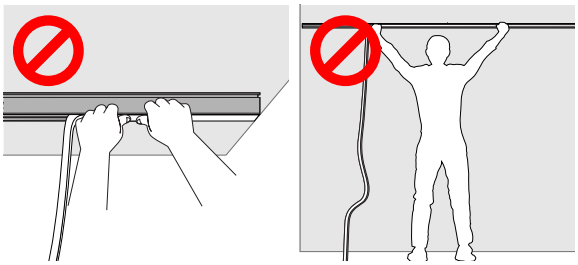

Do not let any portion of the fixture hang in any direction during installation. Use two people to install to ensure the fixture does not hang.

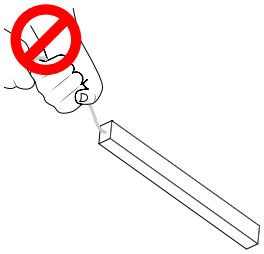

Do not grab or pull by the wire feeds.

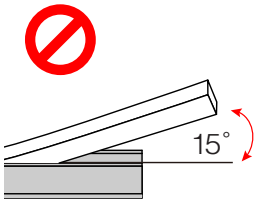

Do not bend the fixture more than 15 degrees when installing into mounting brackets or channels.

MISHANDLING OF FIXTURES DURING INSTALLATION VOIDS WARRANTY

TEMPERATURE RATINGS

Static White & Static White HE	1.5 W/FT		1.5HE W/FT		3.0 W/FT		3.0HE W/FT		5.0 W/FT		6.0HE W/FT	
	Min	Max	Min	Max	Min	Max	Min	Max	Min	Max	Min	Max
Ambient Operating Temp - Surface	-4°F	130°F	-4°F	140°F	-4°F	125°F	-4°F	125°F	-4°F	105°F	-4°F	95°F
Storage Temp	-4°F	140°F	-4°F	140°F	-4°F	140°F	-4°F	140°F	-4°F	140°F	-4°F	140°F
Installation Temp	50°F	100°F	50°F	100°F	50°F	100°F	50°F	100°F	50°F	100°F	50°F	100°F

Static Color	5.0 W/FT	
	Min	Max
Ambient Operating Temp - Surface	-4°F	105°F
Storage Temp	-4°F	140°F
Installation Temp	50°F	100°F

Tunable & Warm Dim	DW 1.5HE W/FT		DW 2.5HE W/FT	
	Min	Max	Min	Max
Ambient Operating Temp - Surface	-4°F	140°F	-4°F	125°F
Storage Temp	-4°F	140°F	-4°F	140°F
Installation Temp	50°F	100°F	50°F	100°F

RGB	5.0 W/FT	
	Min	Max
Ambient Operating Temp - Surface	-14°F	90°F
Storage Temp	-4°F	140°F
Installation Temp	50°F	100°F

© 2025 QTL. All rights reserved | 155 Hill St. Milford, CT 06460 | 203-367-8777 | sales@QTL.lighting | QTL.lighting

Q-CAP LUME-01

Q-CAP Flexible Fixtures Installation Instructions

ATTENTION: Please read all instructions BEFORE installation

- Product to be installed by a licensed electrician - Field modifications void warranty
- Use only with Class 2 power supply unit — Warranty only valid with QTL power supplies
- Surface mount or recessed in millwork
- Not rated for walkover
- Input Voltage: 24VDC
- Diagrams for representation only and not to scale.

METHODS OF INSTALLATION

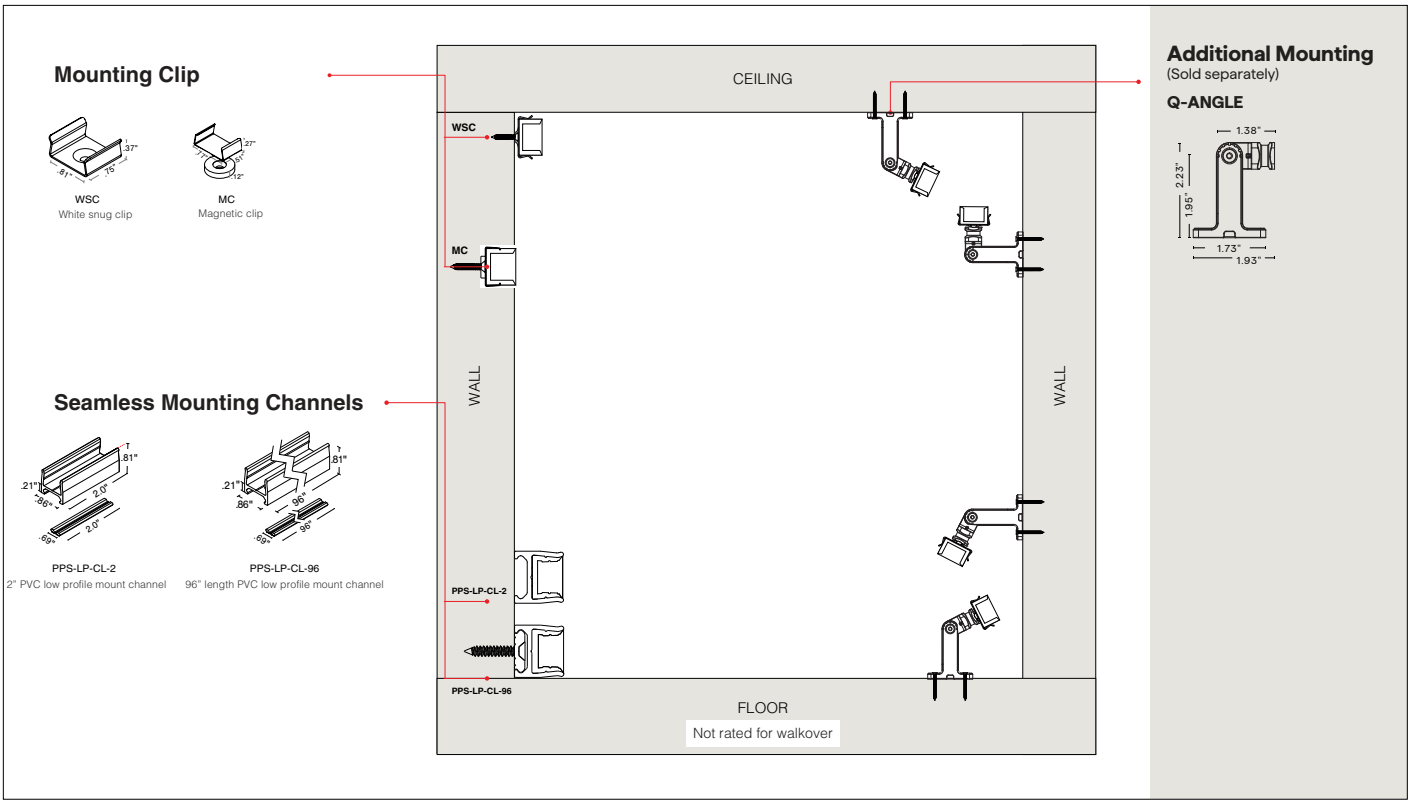

Mounting Method

- WSC (page 6)
- MC (page 7)
- PPS-LP-CL-2 (page 8)
- PPS-LP-CL-96 (page 9)

© 2026 QTL. All rights reserved | 155 Hill St. Milford, CT 06460 | 203-367-8777 | sales@QTL.lighting | QTL.lighting

Q-CAP LUME-01

Q-CAP Flexible Fixtures Installation Instructions

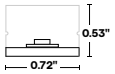

LUME Profile

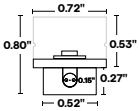

LUME Profile
(Seamless BW)

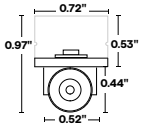

LUME Profile
(Seamless BRL)

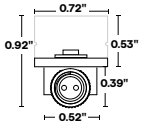

LUME Profile
(Seamless CON24
SW, SC)

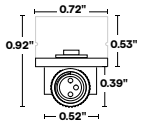

LUME Profile
(Seamless CON24
DW-HE)

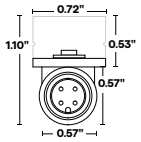

LUME Profile
(Seamless CON24
RGB)

COMPONENTS & HARDWARE

Alternate screw lengths can be used in installation as long as the screw diameter size is consistent with the included screw diameter size

MOUNTING CLIP & MOUNTING CHANNEL

WSC

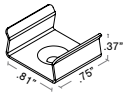

White snug clip

Included

- #6 Flat Screw (one provided for each clip)

- White snug clip included with side graze channel
- 2 white snug clips provided per first 12", 1 for each additional 12".Other mounting styles incur additional charge, see price guide for details

MC

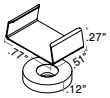

Magnetic clip
(Cove use only)

Included

- #6 Flat Screw (one provided for each clip)

SEAMLESS MOUNTING CLIP & SEAMLESS MOUNTING CHANNEL

PPS-LP-CL-2

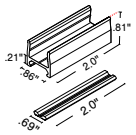

Low profile
PVC mounting clip

Included

- #8 flat head screw (one provided for each clip)
- No wireway

- Join two fixtures together
- PPS kit quantity: **(2 kits per ft) + 1**. For example: 1 ft = (2 × 1) + 1 = 3 PPS kits provided.

PPS-LP-CL-96

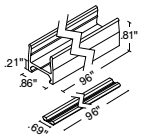

Low profile
PVC channel

Included

- #8 flat head screw (1 screw for every 16")
- No wireway

- Support the fixtures
- PPS kit quantity: **(2 kits per ft) + 1**. For example: 1 ft = (2 × 1) + 1 = 3 PPS kits provided.

ACCESSORIES SOLD SEPARATELY

Q-ANGLE; sold in pairs

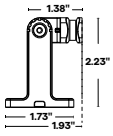

Q-ANGLE

Included

- 4 SS #6×1.25" Flat head wood screws
- 2 SS 4-40 Flat head clip screws
- 2 SS 6-32 Fillister screws

© 2026 QTL. All rights reserved | 155 Hill St. Milford, CT 06460 | 203-367-8777 | sales@QTL.lighting | QTL.lighting

CONFIGURATION OPTIONS

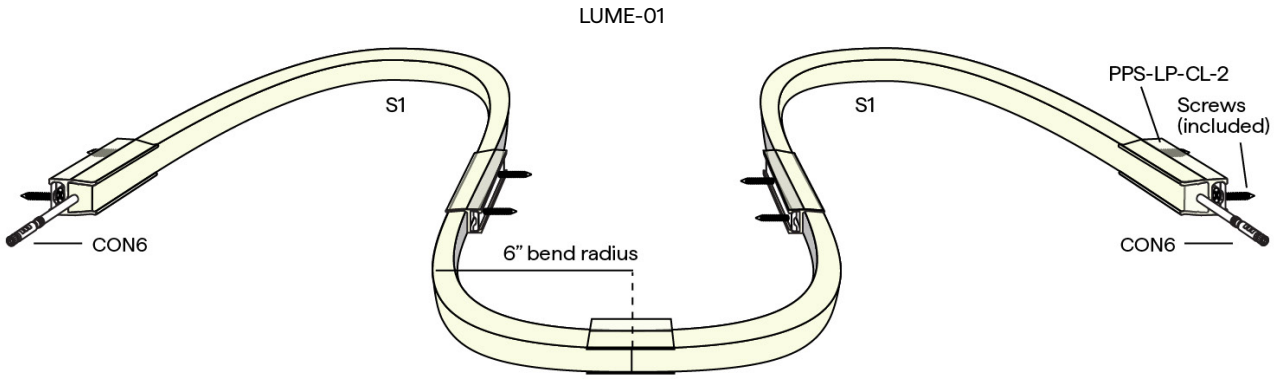

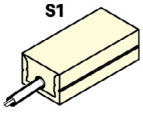

Single End Feed

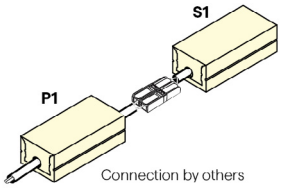

Non-Continuous End Feed

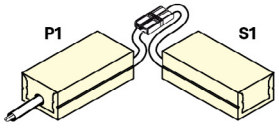

Non-Continuous Corner Feed

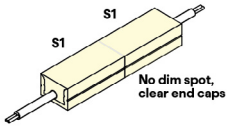

Continuous End to End Feed

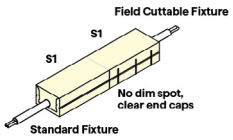

Field Cuttable - Continuous End to End Feed

Review wire method to ensure clean installation prior to mounting finished fixture.

NOTE: Additional wire methods include:
S1: Connector/Wire Input only
P1: Connector/Wire Input and Output

© 2026 QTL. All rights reserved | 155 Hill St. Milford, CT 06460 | 203-367-8777 | sales@QTL.lighting | QTL.lighting

FIELD CUTTABLE

- Field cuttable fixtures are sold in 4' increments and go at the end of a run, allowing easy field adjustment
- Only FC fixtures are field cuttable - DO NOT CUT NON-FIELD CUTTABLE FIXTURES
- Do not attempt to cut while power is on

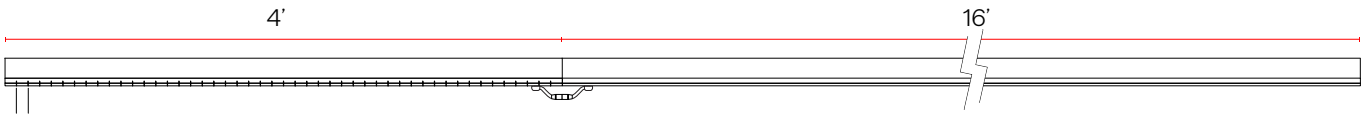

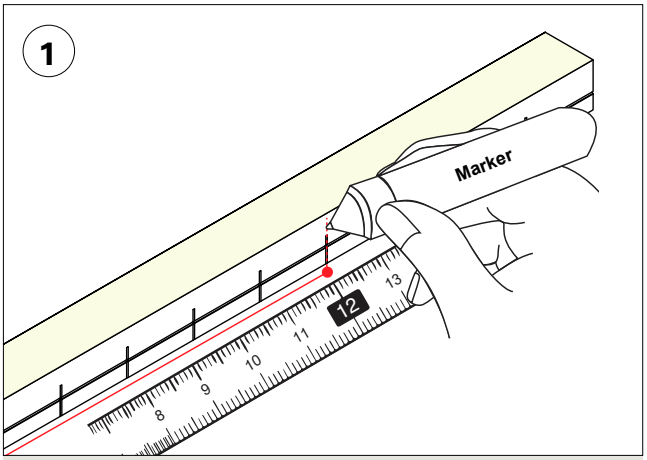

Mark desired length on field cuttable housing on the cut line.

NOTE: Only Cut on the marked cut lines. Only cut from non-feed end.

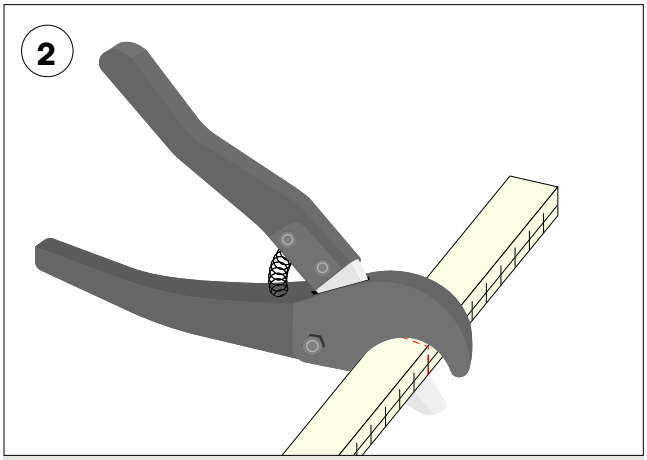

Cut with Q-CAP cutter tools (sold separately).

© 2026 QTL. All rights reserved | 155 Hill St. Milford, CT 06460 | 203-367-8777 | sales@QTL.lighting | QTL.lighting

SURFACE MOUNTING METHOD: **WHITE SNUG CLIP**

- 2 clips provided per first 12", 1 for each additional 12"

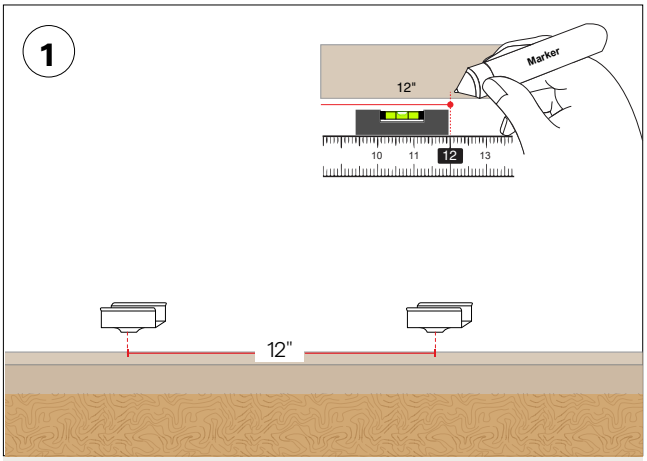

Determine the fixture(s) location and positioning on desired surface; evenly distribute clips. Make any necessary reference markings to indicate where each clip is to be secured in place. Recommended every 12".

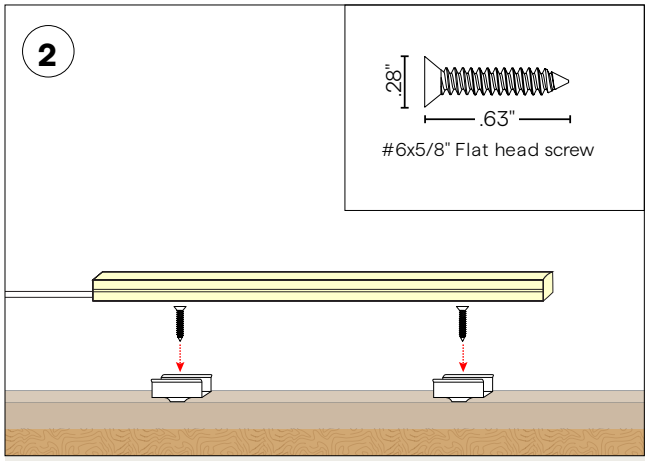

- Secure clips using the #6 flat head hardware provided
- Ensure the screw head is flush with the clip's base.

NOTE: Flat head screw type is dependent on surface/application material Alternative flat head screws may be required. Refer to the surface material manufacturer for suggested screw type.

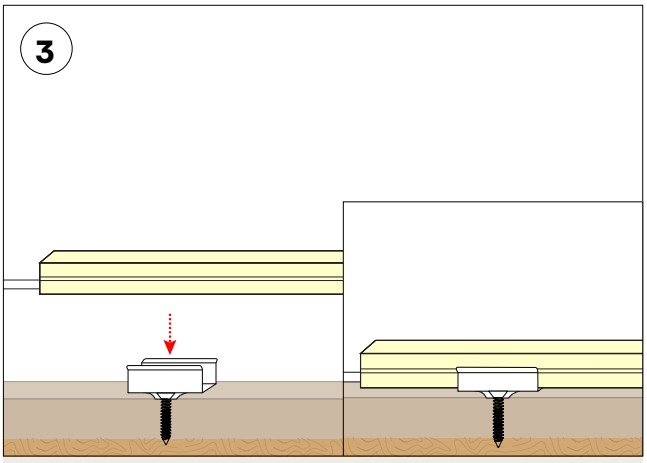

Snap fixture onto clips.

© 2026 QTL. All rights reserved | 155 Hill St. Milford, CT 06460 | 203-367-8777 | sales@QTL.lighting | QTL.lighting

Q-CAP LUME-01

Q-CAP Flexible Fixtures Installation Instructions

MOUNTING METHOD: **MAGNETIC CLIP**

- 2 clips provided per first 12", 1 for each additional 12"

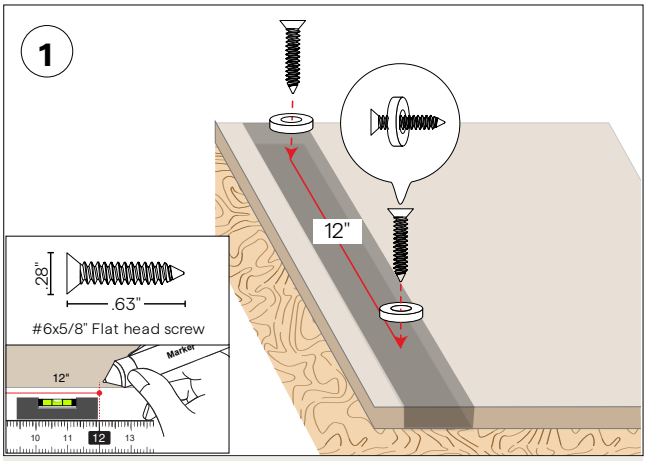

Determine the fixture(s) location and positioning on desired surface; evenly distribute clips. Make any necessary reference markings to indicate where each clip is to be secured in place. Recommended every 12".

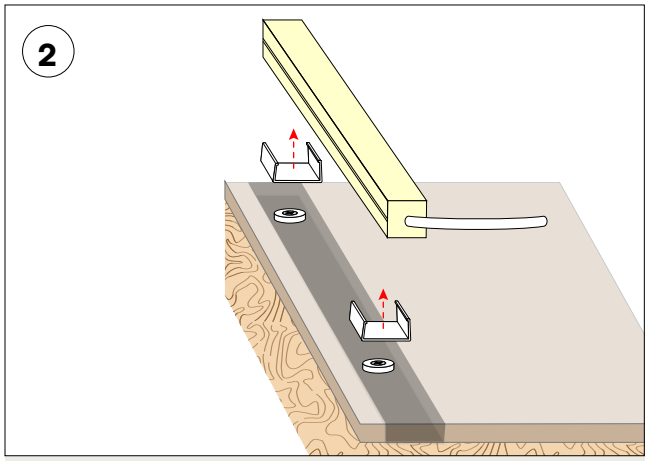

Attach clips to fixture matching magnet distances.

NOTE: Flat head screw type is dependent on surface/application material. Alternative flat head screws may be required. Refer to the surface material manufacturer for suggested screw type.

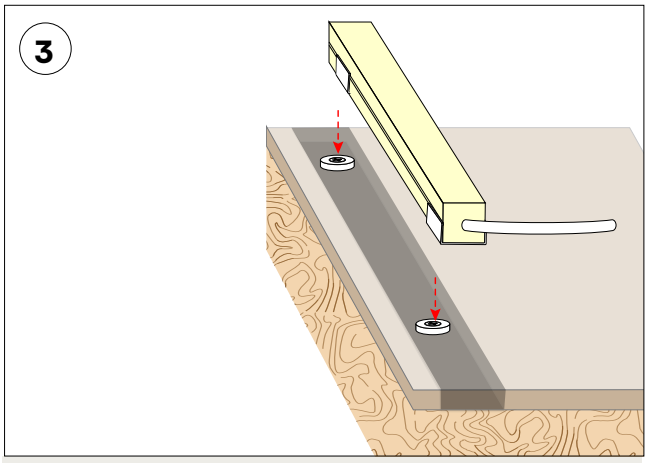

Align and snap fixture to magnetic rings.

© 2026 QTL. All rights reserved | 155 Hill St. Milford, CT 06460 | 203-367-8777 | sales@QTL.lighting | QTL.lighting

SEAMLESS MOUNTING METHOD: **PPS-LP-CL-2**

- Connects two fixtures, with no wire exit
- 2" low profile PVC mount channel

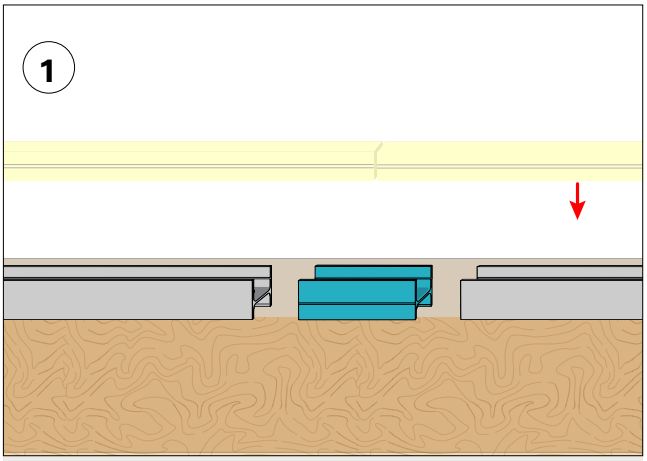

Snap in 2" channel.

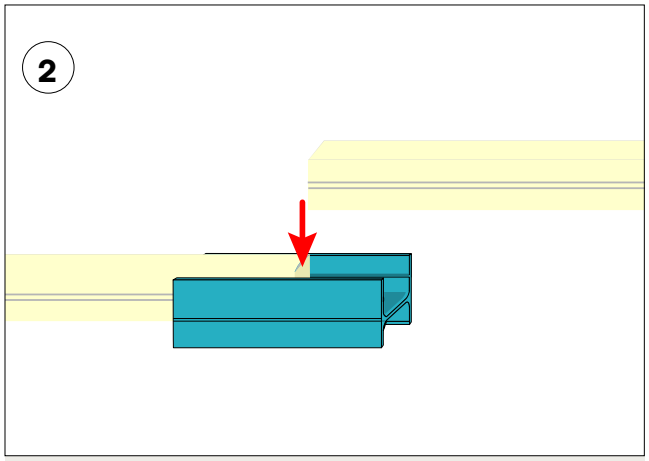

Press fixture into mounted PPS channel.

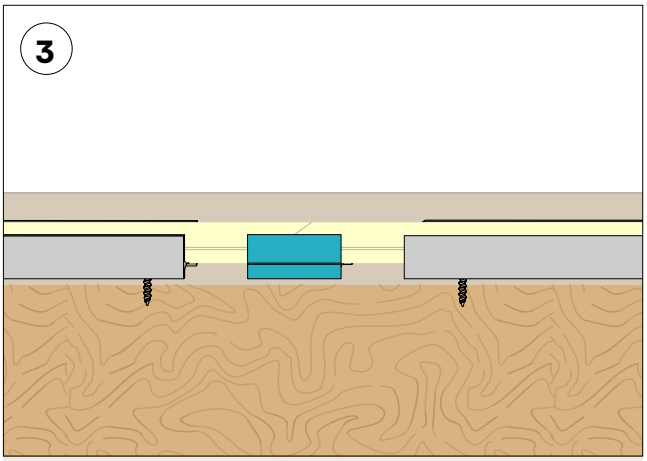

Finished assembly for end feed mounting

© 2026 QTL. All rights reserved | 155 Hill St. Milford, CT 06460 | 203-367-8777 | sales@QTL.lighting | QTL.lighting

SEAMLESS MOUNTING METHOD: **PPS-LP-CL-96**

- Support two fixtures, without built-in wireway
- 96" (PPS-LP-CL-96) low profile PVC mount channel

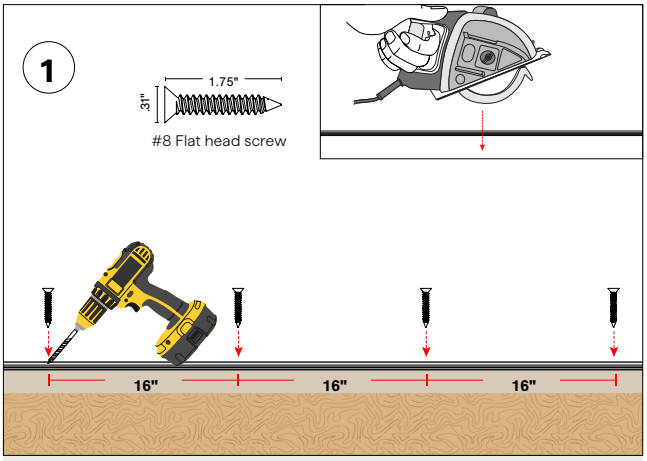

The PPS-BRACKET can be field cuttable and cut to whatever length your application requires. The PPS-BRACKET can be installed as a full length of 96", multiple smaller pieces, or end to end for longer seamless runs.

Using pre-drilled pilot holes screw the #8 flat head screws to mount the PPS-BRACKET (1 screw every 16").

NOTE: For drywall applications mount directly into a stud.

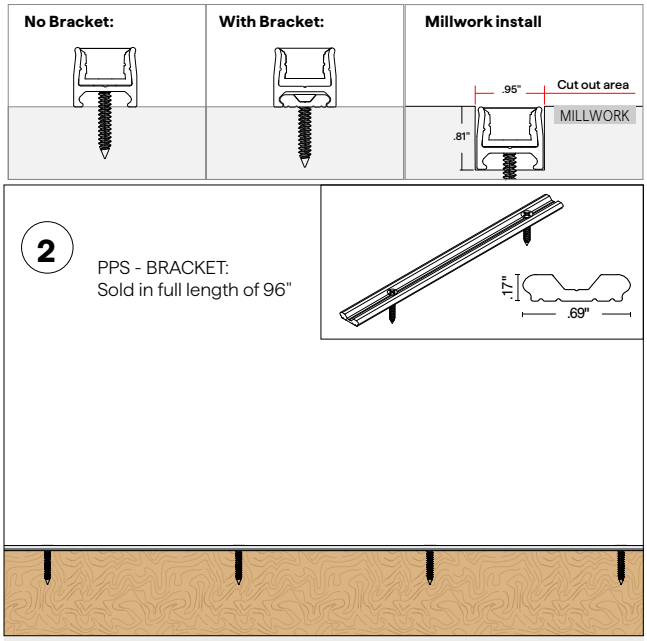

Using pre-drilled pilot holes, use the #8 flat head screws to mount the PPS-BRACKET.

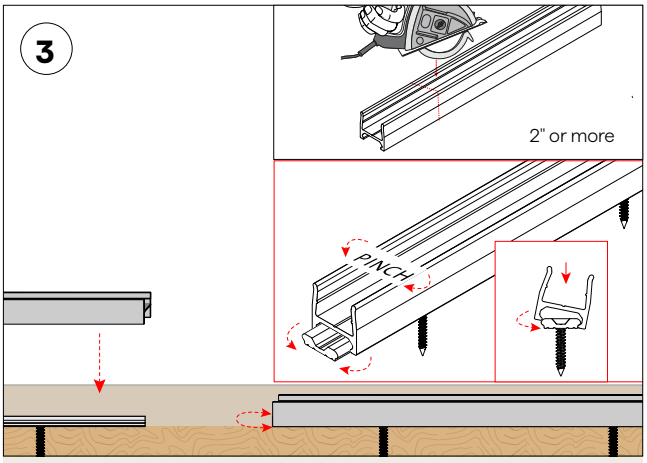

To mount, pinch the upper half of the PPS-LP-CL-96 while you pivot it around one side of the PPS-BRACKET and push-in until you hear it snap into place. The PPS-LP-CL-96 flexes around the PPS-BRACKET to create a solid, and secure snap on connection.

© 2026 QTL. All rights reserved | 155 Hill St. Milford, CT 06460 | 203-367-8777 | sales@QTL.lighting | QTL.lighting