ACCESSORIES

Landscape Lighting Installation Instructions

ATTENTION: Please read all instructions BEFORE installation

- Product to be installed by a licensed electrician - Field modifications void warranty
- Diagrams for representation only and not to scale.

- ROTATIONAL ADAPTER (PAGE 2)
- AY-3 RISER POLE & NPS ADAPTER (PAGE 3)
- AY-7 (PAGE 4)

ACCESSORIES

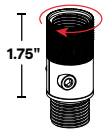	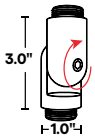		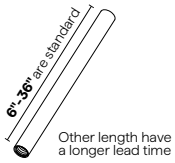
With Water Protection	Elbow Joint	1/2 NPS	Length: 1'-48"
ROTATIONAL ADAPTER (RA)	AY-7	NPS ADAPTER	RISER POLE (AY-3)

COMPONENTS & HARDWARE

PROVIDED HARDWARE

	
M2.5 Allen Key	M4 Allen Key
ALLEN KEY	ALLEN KEY

© 2026 QTL. All rights reserved | 155 Hill St. Milford, CT 06460 | 203-367-8777 | sales@QTL.lighting | QTL.lighting

ROTATIONAL ADAPTER INSTALLATION

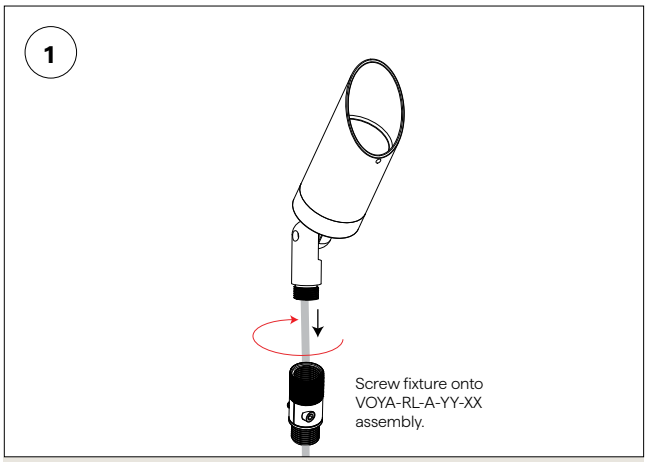

- Add Thread locker - (blue) 242 lock tite on fixture stem threads prior to installing.
- Feed Fixture wire through Rotational adapter as shown - and screw fixture clockwise into the adapter until fully engaged and seated.

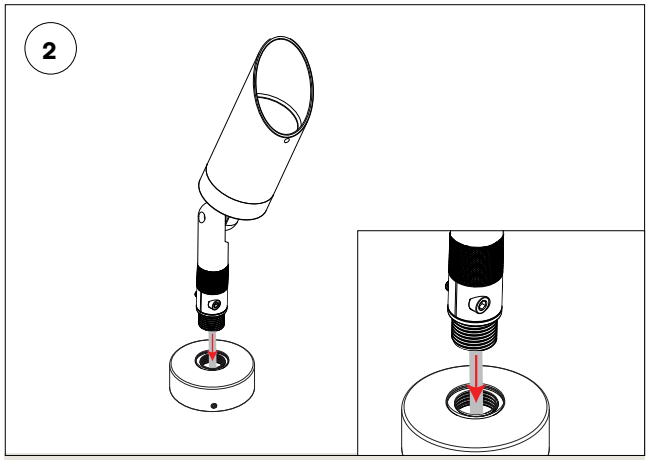

- Feed the fixture lead wire down through the moun of choice.
- Splice and connect wires per fixture and mount installation instructions. See each fixture type and mount install guide.

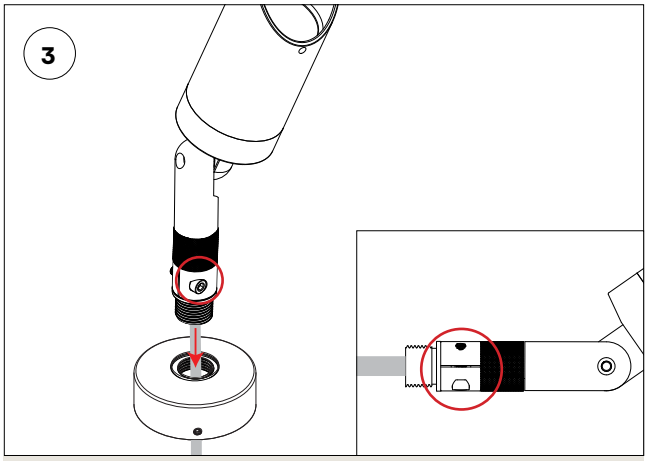

- Free 180° rotation and lock screw.

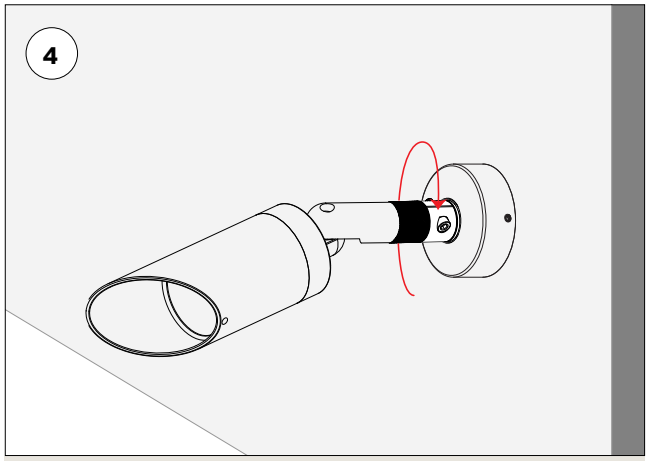

NOTE: *Adjust your aim angle before locking position.*

© 2026 QTL. All rights reserved | 155 Hill St. Milford, CT 06460 | 203-367-8777 | sales@QTL.lighting | QTL.lighting

AY-3 RISER POLE & NPS ADAPTER INSTALLATION

SINGLE RISER

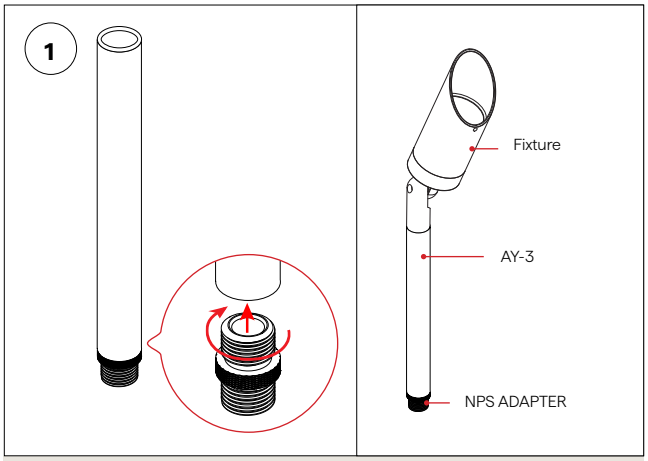

- **To Install:** Align the NPS ADAPTER with the riser and rotate clockwise until fully engaged and seated against the stop.

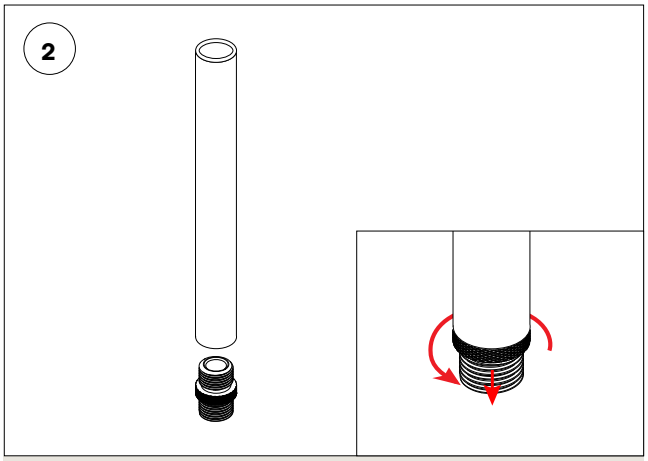

- **To Remove:** Rotate counterclockwise until the connection is disengaged, then lift off the riser.

STACKING RISER - STEMS LONGER THAN 12", CONNECT MULTIPLE AY-3S

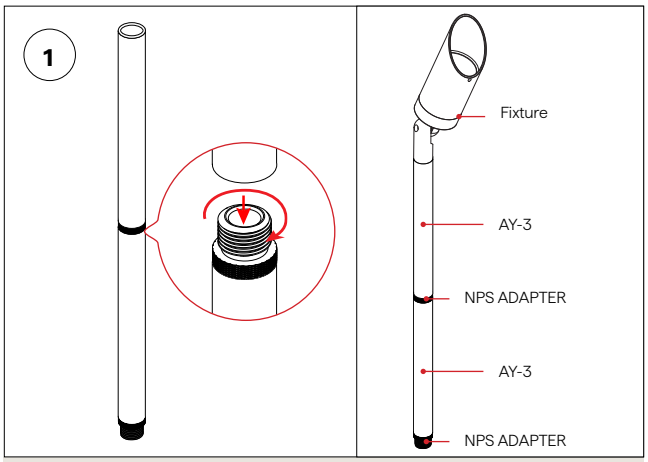

- **To Install:** Align the NPS ADAPTER with the lower riser and rotate clockwise until fully seated against the stop. Install the upper riser and rotate clockwise until fully seated against the stop.

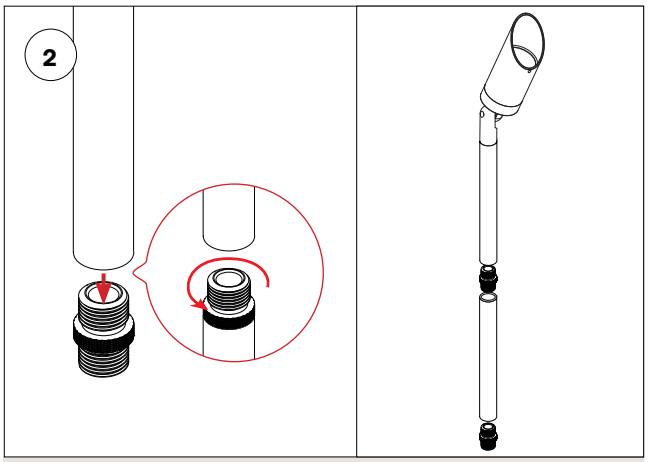

- **To Remove:** Rotate each connection counterclockwise until disengaged, then remove the upper riser followed by the NPS assembly.

© 2026 QTL. All rights reserved | 155 Hill St. Milford, CT 06460 | 203-367-8777 | sales@QTL.lighting | QTL.lighting

AY-7 INSTALLATION

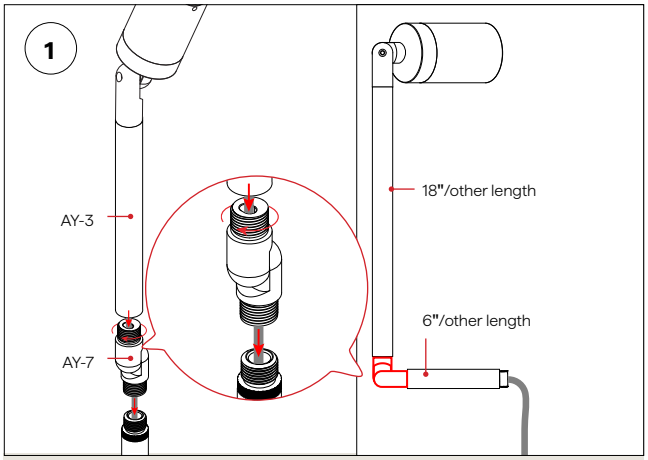

- Install AY3 riser on AY7 Elbow joint, twist riser clockwise to install.
- Weave fixture wire through riser and arm then through riser to mounted canopy or housing.

NOTE: *Order longer lead wire to achieve this Goose neck style installation.*

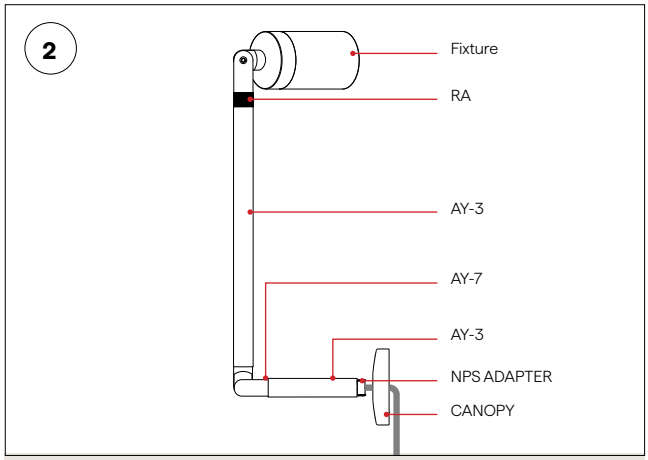

- Example of all accessories used to freely adjust the fixture as needed.

© 2026 QTL. All rights reserved | 155 Hill St. Milford, CT 06460 | 203-367-8777 | sales@QTL.lighting | QTL.lighting