DIRECT BURIAL

Landscape Lighting Installation Instructions

ATTENTION: Please read all instructions BEFORE installation

- Product must be installed by a licensed electrician. Field modifications void the warranty.
- Warranty is valid only with QTL power supplies.
- Diagrams are for representation only and are not to scale.
- DO NOT cover the luminaire with soil or mulch.
- Squeeze silicone into the NPT threads on Q-TRIX units before mounting the fixture.
- Burial cable must be rated for direct burial and buried a minimum of 6" deep.
- J-BOX, connectors, and wire are supplied by the installer.
- Use a liquid-tight connector for 120V wire entry to the Q-MT-48.
- Voya 3.5 fixture shipped installed on the mounts - Q-MT-48, Q-MT-49 or Q-MT-50. Follow instructions for how to splice wires

METHODS OF INSTALLATION

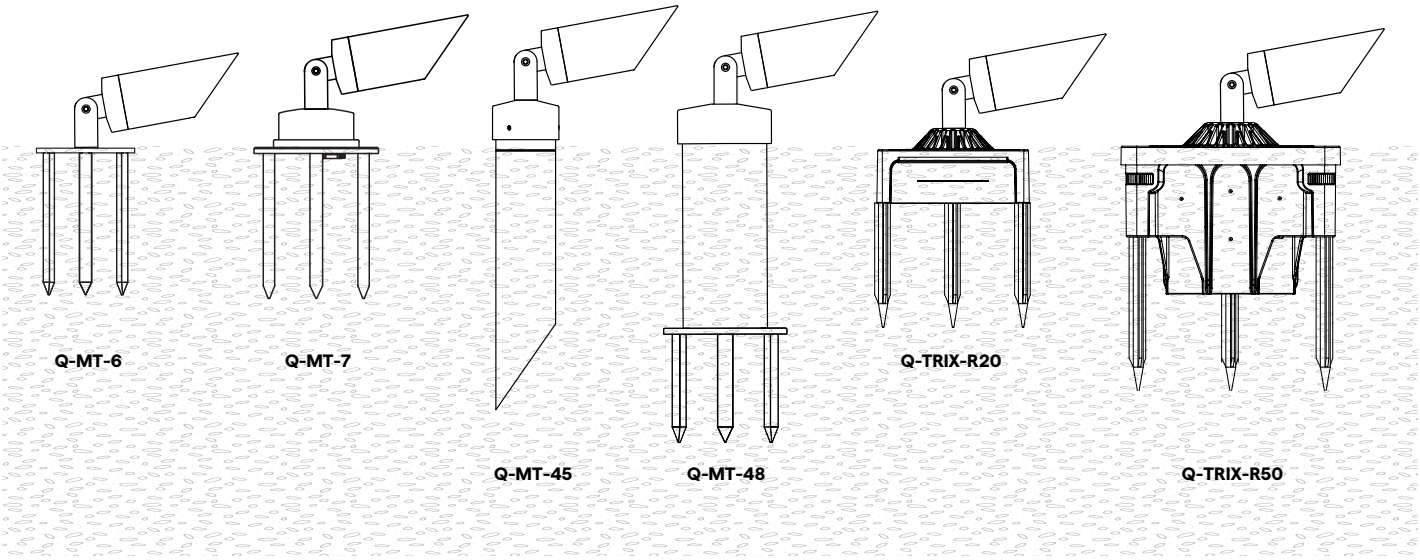

- LUMINAIRE & MOUNT COMPATIBILITY (PAGE 2)
- COMPONENTS & HARDWARE (PAGE 3)
- SURFACE PREP (PAGE 4)
- DIRECT BURIAL - NO DRIVER (PAGE 5-9)
- DIRECT BURIAL - WITH DRIVER (PAGE 10-11)
- DIRECT BURIAL - DRIVER WITH DIMMER (PAGE 12-13)
- DIRECT BURIAL - Q-TRIX (PAGE 14-15)

© 2026 QTL. All rights reserved | 155 Hill St. Milford, CT 06460 | 203-367-8777 | sales@QTL.lighting | QTL.lighting

LUMINAIRE & MOUNT COMPATIBILITY

	Q-MT-6	Q-MT-7	Q-MT-45	Q-MT-48 No Driver	Q-MT-48 With Driver	Q-TRIX-R20 No Driver	Q-TRIX-R50 With Driver
VOYA-EM-1.75-MR11-12VAC	✓	✓	✓			✓	✓
VOYA-EM/SM-2.5	✓	✓	✓			✓	✓
VOYA-EM/SM-3.0-PAR20/GU10				✓			
VOYA-EM/SM-3.5-COB-120VAC					✓		
Excelsior UL-1	✓	✓					
Excelsior UL-1L	✓	✓					
Excelsior UL-2	✓	✓					
Excelsior UL-2L	✓	✓					
Excelsior UL-4	✓	✓					
Excelsior UL-4L	✓	✓					
Excelsior UL-5	✓	✓					
Excelsior UL-5L	✓	✓					
Excelsior UL-6	✓	✓					
Excelsior UL-6L	✓	✓					
Excelsior UL-7	✓	✓					
Excelsior UL-7L	✓	✓					
Excelsior PL-1	✓	✓	✓				
Excelsior PL-2	✓	✓	✓				
Excelsior PL-3	✓	✓	✓				
Excelsior PL-4	✓	✓	✓				
Excelsior PL-10	✓	✓	✓				
Excelsior PL-11	✓	✓	✓				
Excelsior PL-15	✓	✓	✓				
Excelsior PL-23	✓	✓	✓				
Excelsior PL-7	✓	✓	✓				
Excelsior PL-7L	✓	✓	✓				
Excelsior PL-27	✓	✓	✓				
Excelsior PL-28	✓	✓	✓				
Excelsior PL-5	✓	✓	✓				
Excelsior PL-6	✓	✓	✓				

© 2026 QTL. All rights reserved | 155 Hill St. Milford, CT 06460 | 203-367-8777 | sales@QTL.lighting | QTL.lighting

DIRECT BURIAL

Landscape Lighting Installation Instructions

Q-MT-6

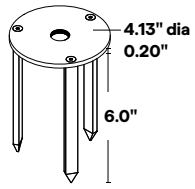

Q-MT-7

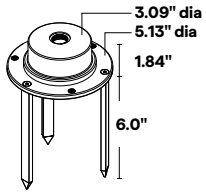

With Water Protection

Q-MT-45

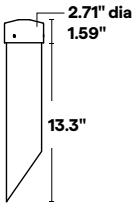

Q-MT-48

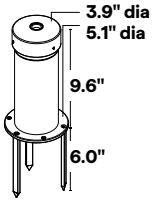

With Water Protection
No Driver | With Driver

Q-TRIX-R20

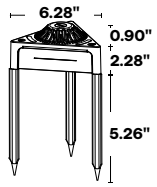

With Water Protection
No Driver

Q-TRIX-R50

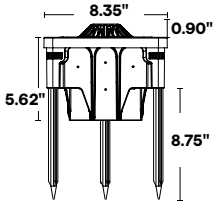

With Water Protection
With Driver

COMPONENTS & HARDWARE

PROVIDED HARDWARE

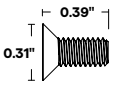 **#PN** Q-MT-7 **QTY** 3	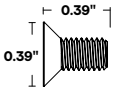 **#PN** Q-MT-6, Q-MT-7 **QTY** 3, 3	 **#PN** Q-MT-45 **QTY** 3	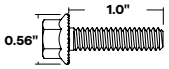 **TYPE** SCREWS For Q-TRIX-R50 **QTY** 3
M4x10mm	M5x12mm	M5x6mm	1/4"-20x1"
FLAT HEAD HEX SCREW	PHILLIPS FLAT HEAD SCREW	SET SCREW	SERRATED-FLANGE HEX HEAD SCREWS
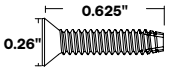 **TYPE** SCREWS For Q-TRIX-R20 **QTY** 3	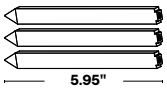 **#PN** Q-MT-6, Q-MT-7, Q-MT-48 **QTY** 3, 3, 3	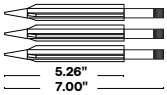 **TYPE** STAKE **QTY** 3	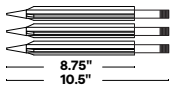 **TYPE** STAKE **QTY** 3
6-32x5/8"	Stake: Use M5×12mm Phillips FH screws	Stake for Q-TRIX-R20	Stake for Q-TRIX-R50
PHILLIPS FLAT HEAD THREAD SCREW	PLANTING STAKE	PLANTING STAKE	PLANTING STAKE

RECOMMENDED HARDWARE | **SUGGESTED TOOLS/MATERIALS**

 **#PN** Q-MT-6 **QTY** 1	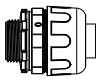 **#PN** Q-MT-7, Q-MT-48 **QTY** 1, 1	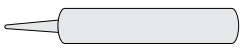	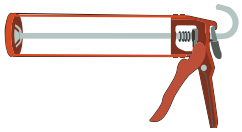
1/2-14 NPS HEX NUT	1/2" Liquid-Tight Connector (By Others)	Waterproof Silicone	
HEX NUT / JAM NUT	CONDUIT CONNECTOR	ALL PURPOSE SILICONE	CAULKING GUN

© 2026 QTL. All rights reserved | 155 Hill St. Milford, CT 06460 | 203-367-8777 | sales@QTL.lighting | QTL.lighting

SURFACE PREP

EXCAVATE (DIG HOLE): Q-MT-6, Q-MT-7, Q-MT-45, Q-MT-48

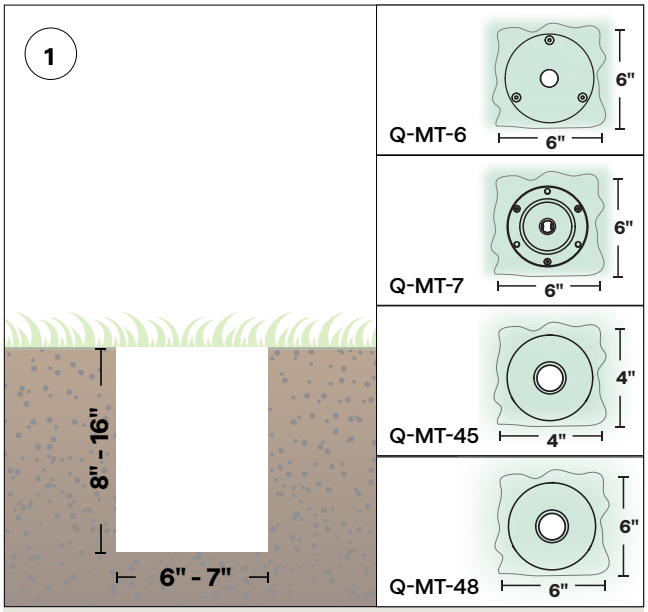

- Dig the hole to match the size of the housing for the product, as shown above for the hole length and width.

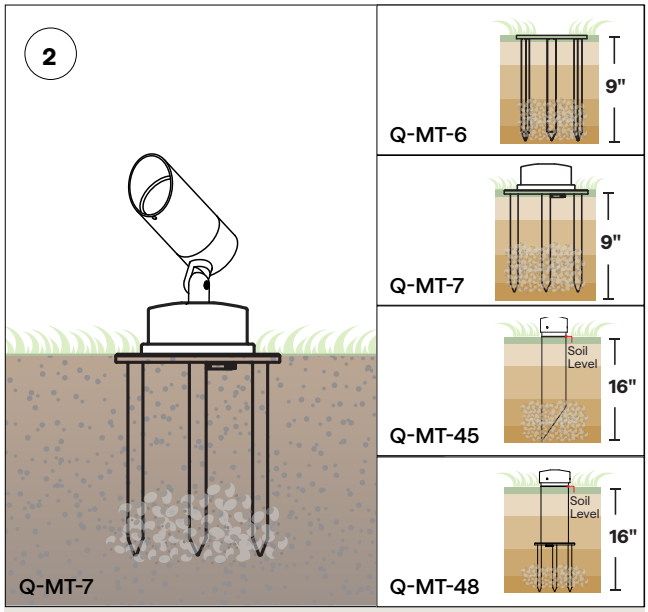

- Dig the hole to match the size of the housing for the product, as shown above for the hole depth.

EXCAVATE (DIG HOLE): Q-TRIX-R20, Q-TRIX-R50

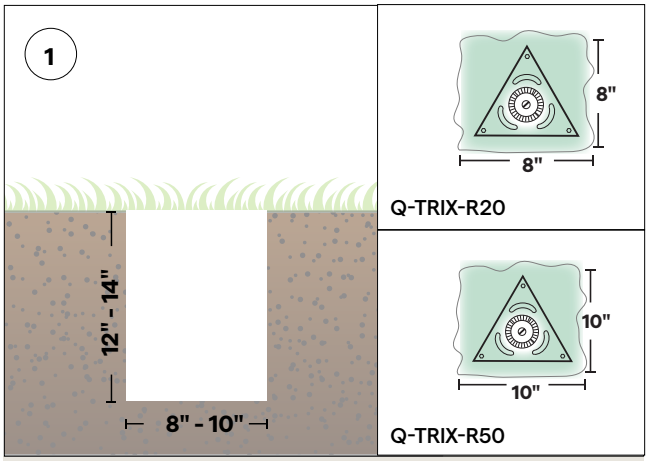

- Dig the hole to match the size of the housing for the product, as shown above for the hole length and width.

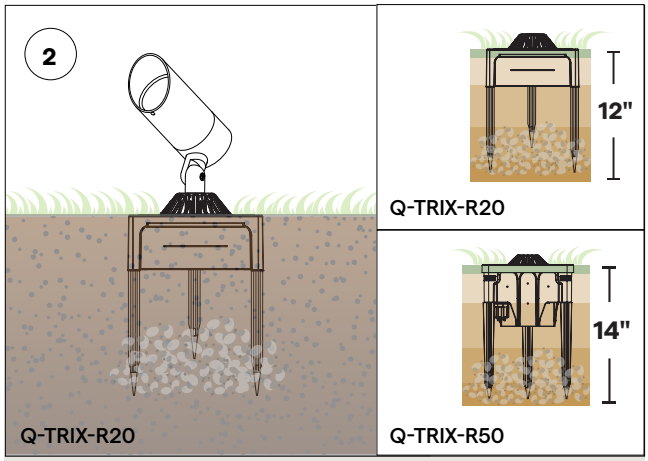

- Dig the hole to match the size of the housing for the product, as shown above for the hole depth.

© 2026 QTL. All rights reserved | 155 Hill St. Milford, CT 06460 | 203-367-8777 | sales@QTL.lighting | QTL.lighting

DIRECT BURIAL

Landscape Lighting Installation Instructions

MOUNTING METHOD: **DIRECT BURIAL - NO DRIVER**
Q-MT-6

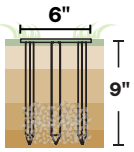

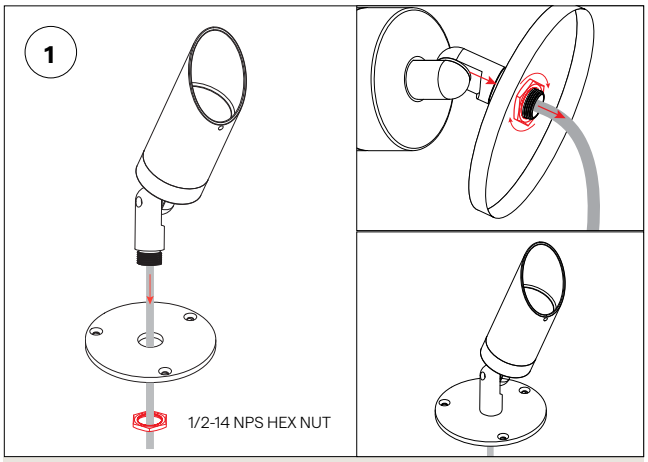

- Feed the fixture lead wire down through the plate, then screw fixture down with HEX NUT until fully seated.

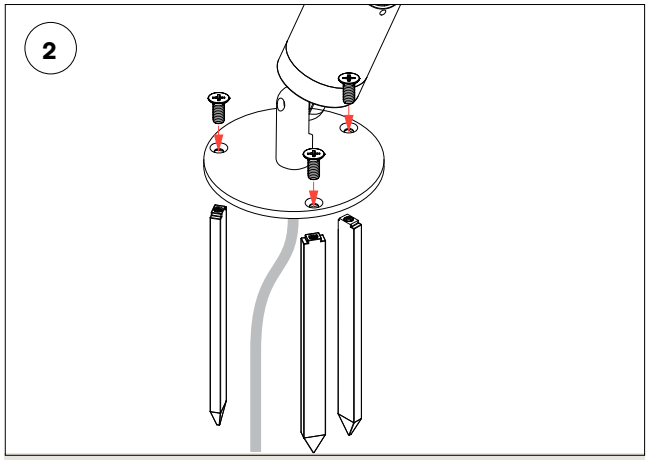

- Attach the three (3) planting stakes to the underside of the mount using the supplied screws.

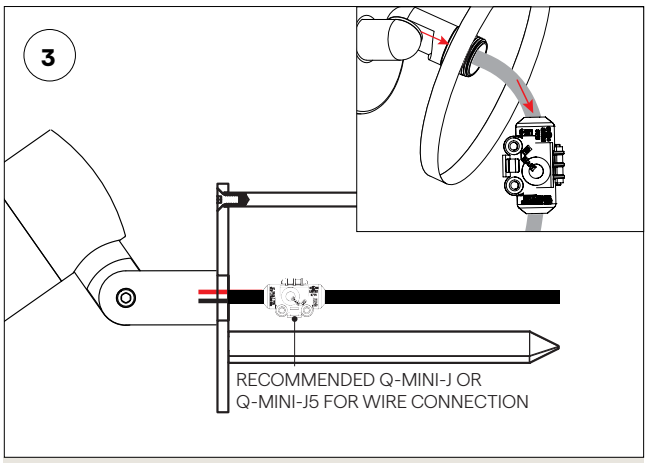

- Use liquid-tight wire nuts or QTL Q-Mini-J and follow the wiring diagram in the luminaire installations.
- Follow the wiring diagram in the luminaire instructions.

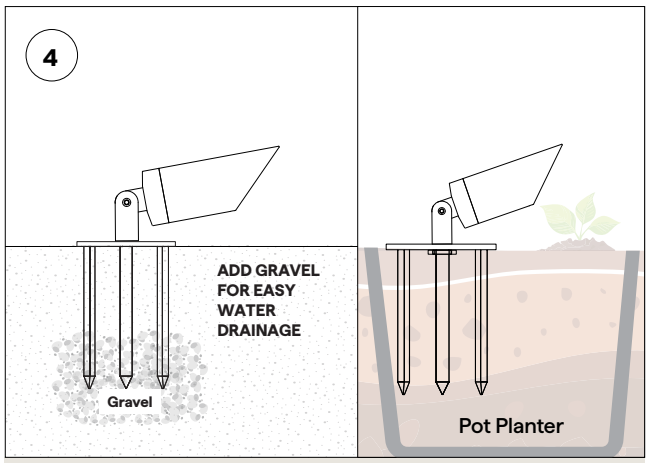

- Add gravel for easy drainage then backfill hole with soil as shown.

DO NOT COVER THE LUMINAIRE.

© 2026 QTL. All rights reserved | 155 Hill St. Milford, CT 06460 | 203-367-8777 | sales@QTL.lighting | QTL.lighting

DIRECT BURIAL

Landscape Lighting Installation Instructions

MOUNTING METHOD: **DIRECT BURIAL - NO DRIVER**
Q-MT-7

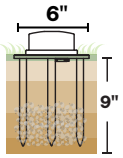

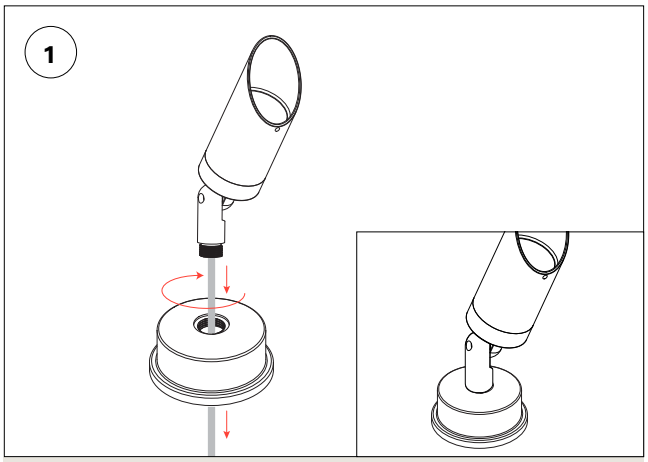

- Feed the fixture lead wire down through the canopy, then thread the fixture stem into the canopy opening and rotate until fully seated.

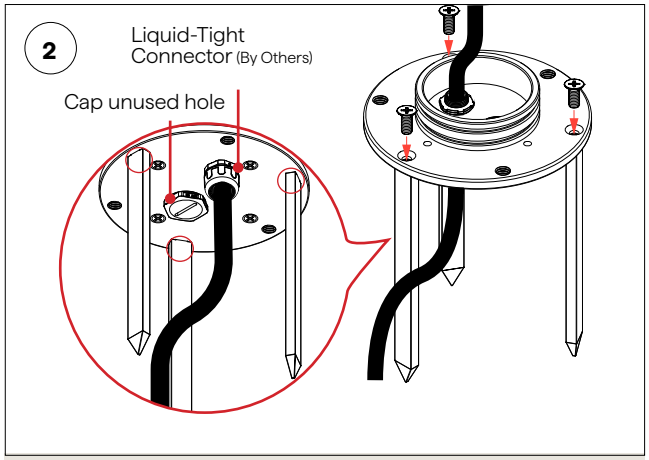

- Route the wire into 1/2" liquid-tight connector.
- Attach the three (3) planting stakes to the underside of the mount using the supplied screws.

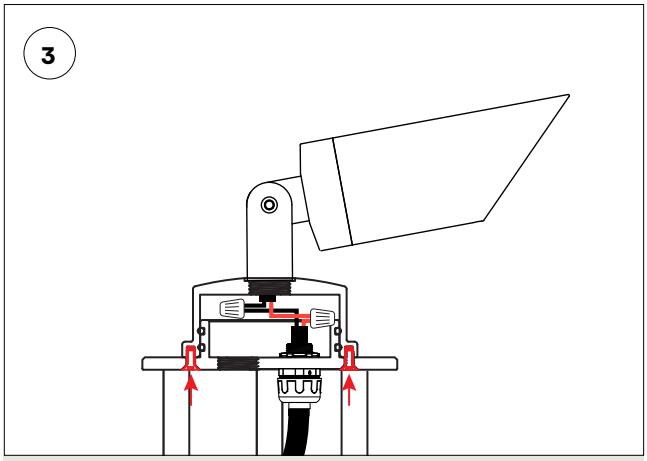

- Follow the wiring diagram in the luminaire instructions. Install canopy screws from under plate to complete the installation.

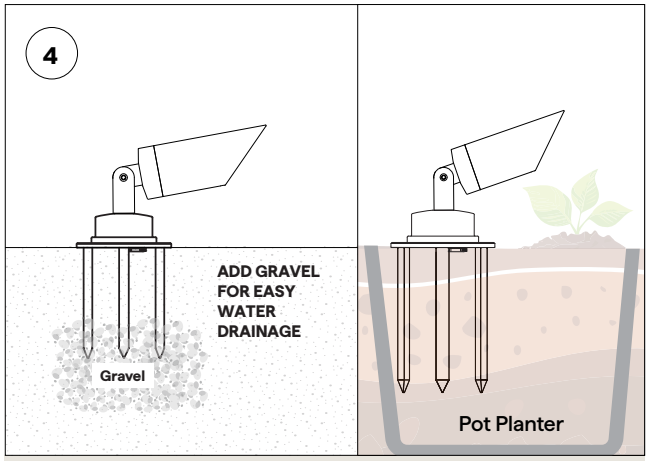

- Add gravel for easy drainage then backfill hole with soil as shown.

DO NOT COVER THE LUMINAIRE.

© 2026 QTL. All rights reserved | 155 Hill St. Milford, CT 06460 | 203-367-8777 | sales@QTL.lighting | QTL.lighting

DIRECT BURIAL

Landscape Lighting Installation Instructions

MOUNTING METHOD: **DIRECT BURIAL - NO DRIVER**
Q-MT-45

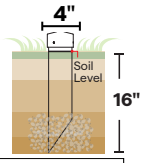

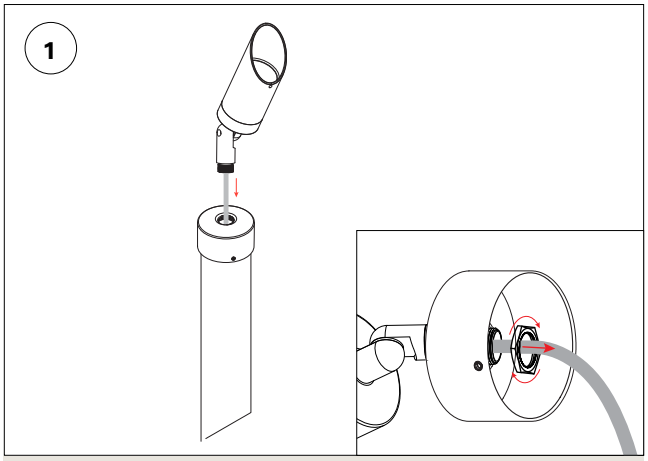

- Feed the fixture lead wire down through the canopy, then thread the fixture stem into the canopy opening and rotate until fully seated.

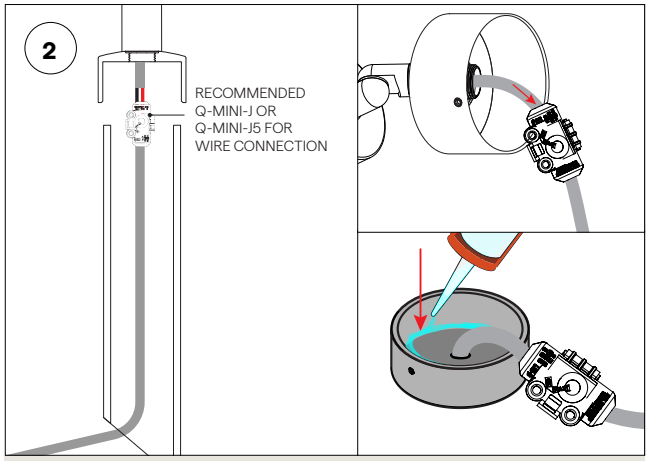

- Pull supply wire out of the PVC tube and splice the fixture wires.
- Use liquid-tight wire nuts or QTL Q-Mini-J and follow the wiring diagram in the luminaire installations.
- After wiring apply a 3/8-inch bead of silicone to the inner corner of the Q-MT-45 cap. Use a finger or tool to spread the bead evenly, ensuring all corners are fully covered.

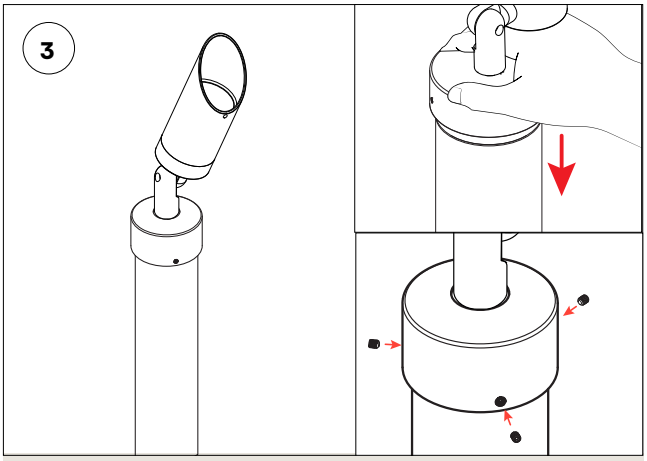

- Place canopy over tube and Press the cap firmly until it is fully seated over the Q-MT-48 tube.
- Insert the three (3) side set screws and tighten until firm. Allow the silicone to set for 2 hours before testing or powering the device.
- Connection complete ready for burial.

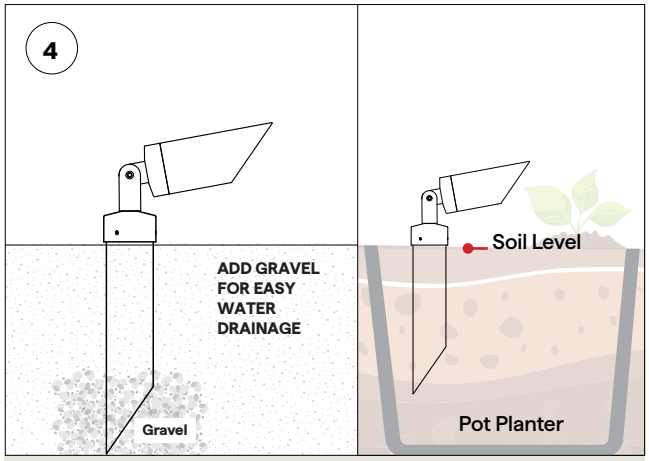

- Add gravel for easy drainage then backfill hole with soil as shown.

DO NOT COVER THE LUMINAIRE.

© 2026 QTL. All rights reserved | 155 Hill St. Milford, CT 06460 | 203-367-8777 | sales@QTL.lighting | QTL.lighting

DIRECT BURIAL

Landscape Lighting Installation Instructions

MOUNTING METHOD: **DIRECT BURIAL - NO DRIVER**
Q-MT-48

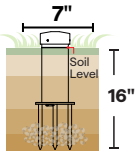

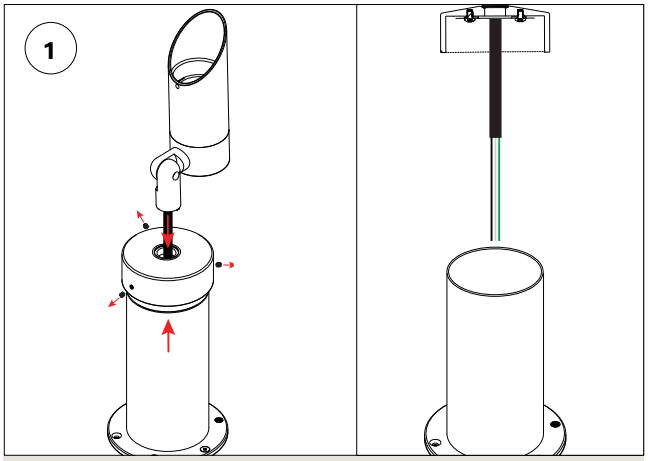

- Remove the set screws, then remove the top cap.
- Install fixture onto canopy.
- Feed the fixture lead wire down through the canopy then thread the fixture into the canopy opening and rotate until fully seated.

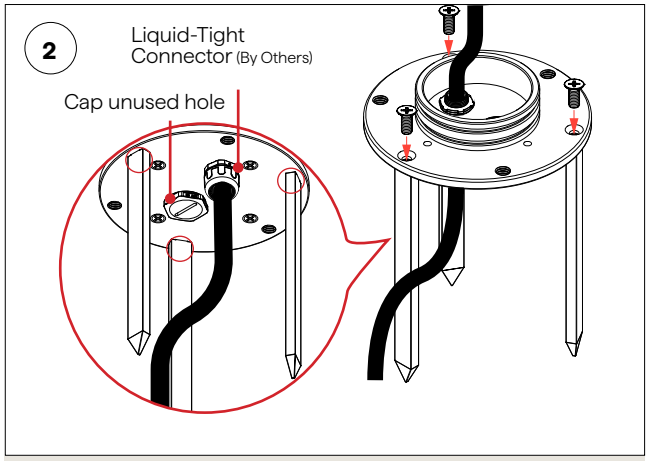

- Route the wire into 1/2" liquid-tight connector (by others).
- Attach the three (3) planting stakes to the underside of the mount using the supplied screws.

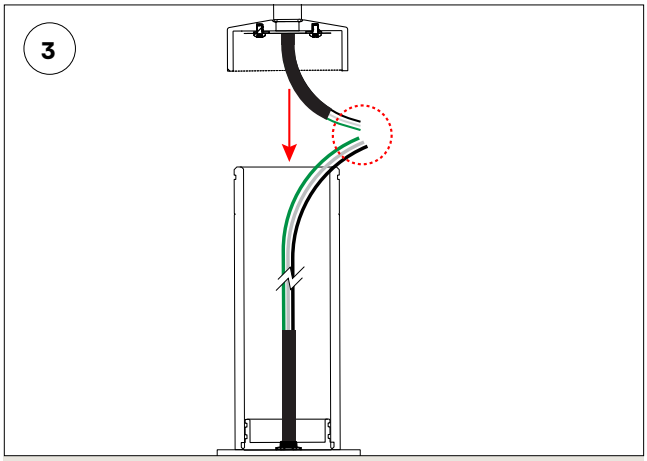

- For ease of splicing, pull the line-voltage wire out of the tube to splice it to the fixture wire using wire nuts (by others) follow luminaire wiring instructions.

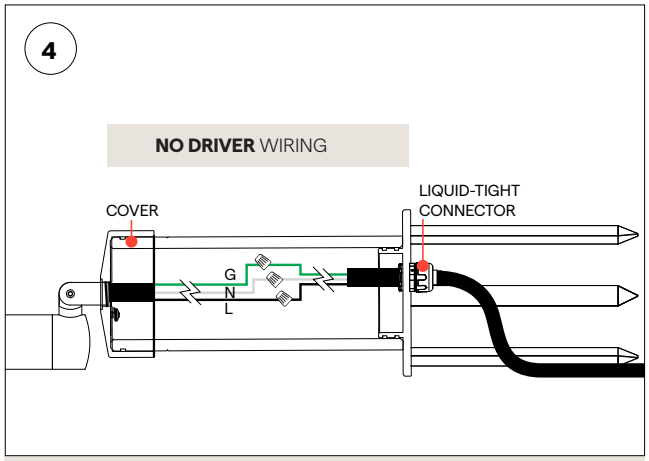

- Visual representation of complete wiring.
- Follow the wiring diagram in the luminaire instructions.

© 2026 QTL. All rights reserved | 155 Hill St. Milford, CT 06460 | 203-367-8777 | sales@QTL.lighting | QTL.lighting

MOUNTING METHOD: **DIRECT BURIAL - NO DRIVER**
Q-MT-48

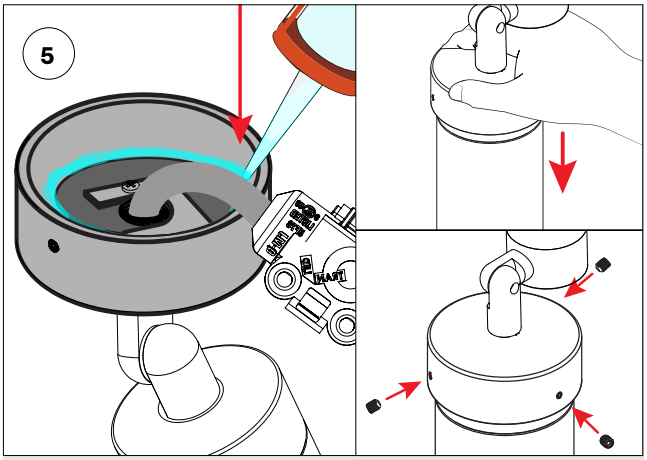

- After wiring apply a 3/8-inch bead of silicone to the inner corner of the Q-MT-48 top cap. Use a finger or tool to spread the bead evenly, ensuring all corners are fully covered.
- Place canopy over tube and Press the cap firmly until it is fully seated over the Q-MT-48 tube.
- Insert the three (3) side set screws and tighten until firm. Allow the silicone to set for 2 hours before testing or powering the device.
- Connection complete ready for burial.

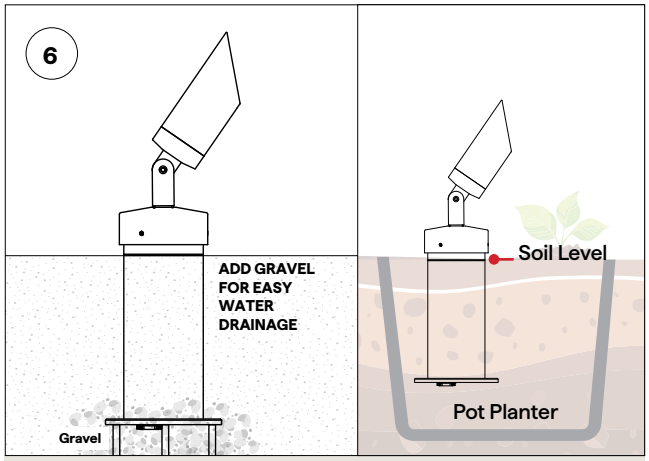

- Add gravel for easy drainage then backfill hole with soil as shown.

DO NOT COVER THE LUMINAIRE.

© 2026 QTL. All rights reserved | 155 Hill St. Milford, CT 06460 | 203-367-8777 | sales@QTL.lighting | QTL.lighting

MOUNTING METHOD: **DIRECT BURIAL - WITH DRIVER**
Q-MT-48

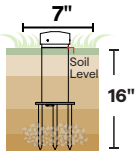

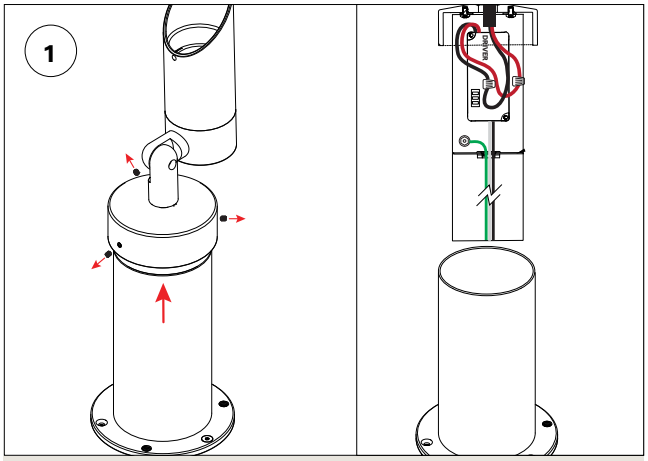

- Remove the set screws, then remove the top cap along with driver attached.

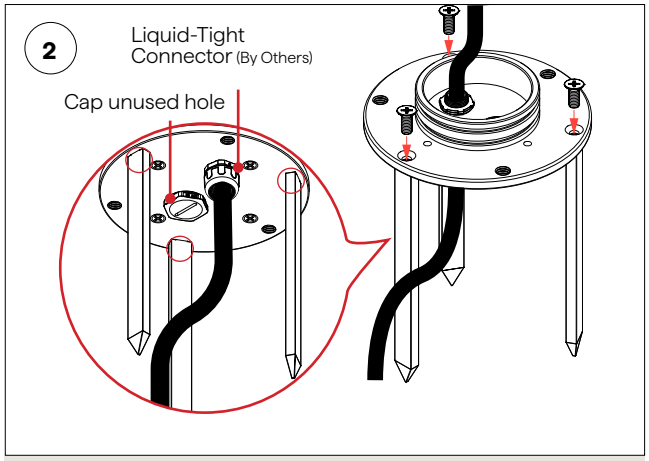

- Route the wire into 1/2" liquid-tight connector (by others).
- Attach the three (3) planting stakes to the underside of the mount using the supplied screws.

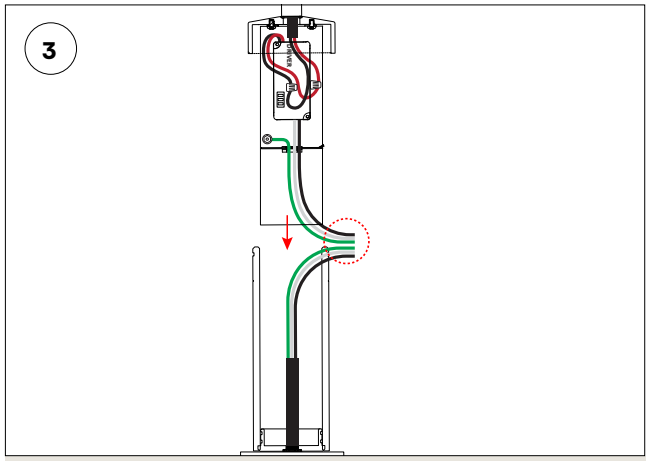

- For ease of splicing, pull the line-voltage wire out of the tube and splice it to the fixture wire using wire nuts (by others) follow luminaire wiring instructions.

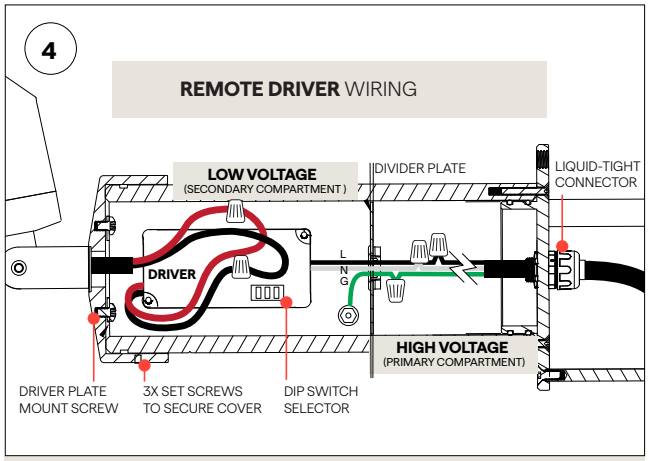

- Visual representation of complete wiring.
- Follow the wiring diagram in the luminaire instructions.

© 2026 QTL. All rights reserved | 155 Hill St. Milford, CT 06460 | 203-367-8777 | sales@QTL.lighting | QTL.lighting

MOUNTING METHOD: **DIRECT BURIAL - WITH DRIVER**
Q-MT-48

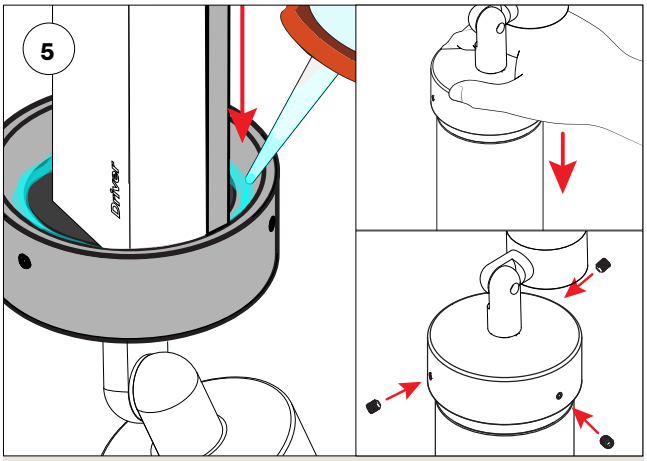

- Apply a 3/8-inch bead of silicone to the inner corner of the Q-MT-48 top cap. Use a finger or tool to spread the bead evenly, ensuring all corners are fully covered.
- Place canopy over tube and Press the cap firmly until it is fully seated over the Q-MT-48 tube.
- Insert the three (3) side set screws and tighten until firm. Allow the silicone to set for 2 hours before testing or powering the device.
- Connection complete ready for burial.

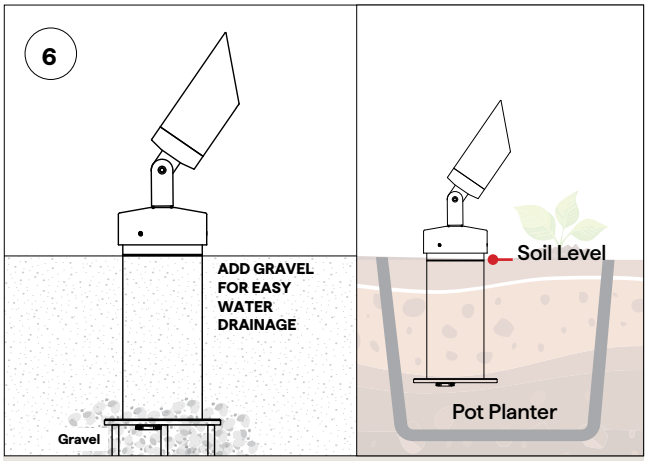

- Add gravel for easy drainage then backfill hole with soil as shown.

DO NOT COVER THE LUMINAIRE.

© 2026 QTL. All rights reserved | 155 Hill St. Milford, CT 06460 | 203-367-8777 | sales@QTL.lighting | QTL.lighting

MOUNTING METHOD: **DIRECT BURIAL - DRIVER WITH DIMMER**
Q-MT-48

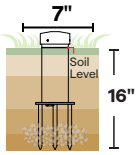

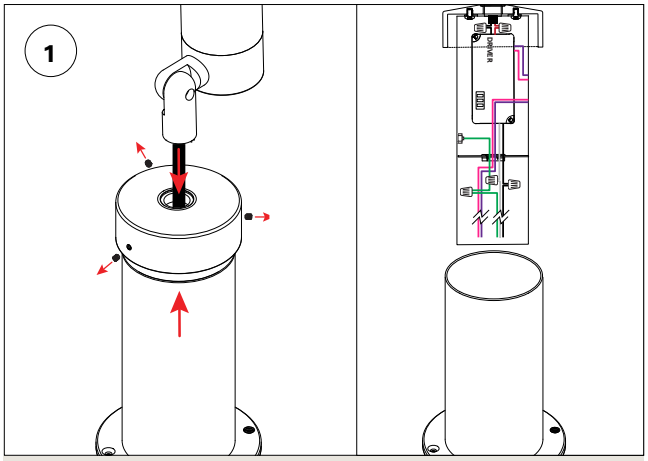

- Remove the set screws, then remove the top cap along with driver attached.

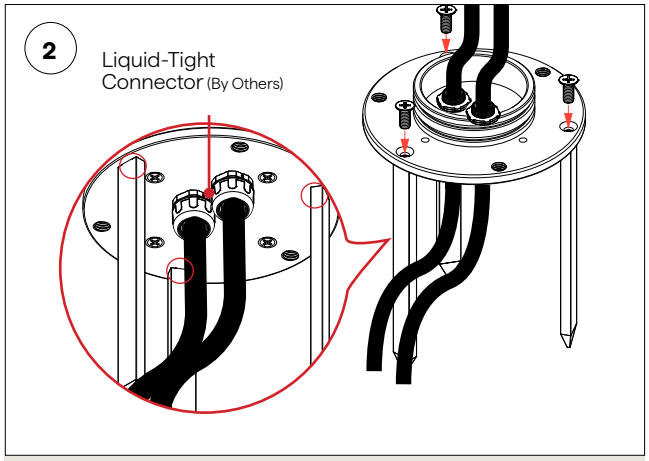

- Route the wire into 1/2" liquid-tight connector (by others).
- Attach the three (3) planting stakes to the underside of the mount using the supplied screws.

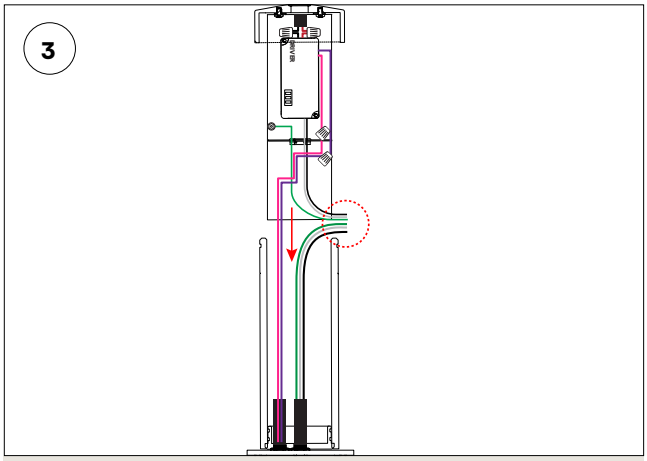

- For ease of splicing, pull the line-voltage wire out of the tube and splice it to the fixture wire using wire nuts (by others) follow luminaire wiring instructions.

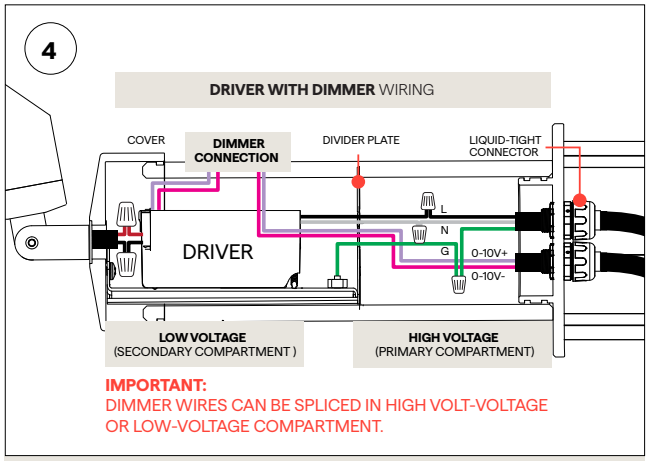

- Visual representation of complete wiring.
- Follow the wiring diagram in the luminaire instructions.

© 2026 QTL. All rights reserved | 155 Hill St. Milford, CT 06460 | 203-367-8777 | sales@QTL.lighting | QTL.lighting

MOUNTING METHOD: **DIRECT BURIAL - DRIVER WITH DIMMER**
Q-MT-48

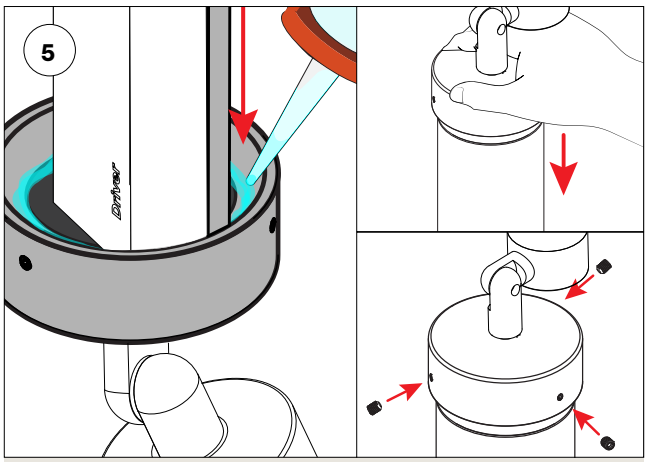

- Apply a 3/8-inch bead of silicone to the inner corner of the Q-MT-48 top cap. Use a finger or tool to spread the bead evenly, ensuring all corners are fully covered.
- Place canopy over tube and Press the cap firmly until it is fully seated over the Q-MT-48 tube.
- Insert the three (3) side set screws and tightened until firm. Allow the silicone to set for 2 hours before testing or powering the device.
- Connection complete ready for burial.

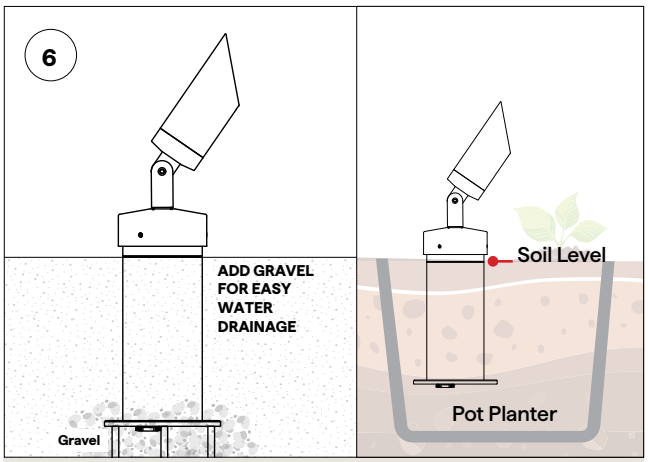

- Add gravel for easy drainage then backfill hole with soil as shown.

DO NOT COVER THE LUMINAIRE.

© 2026 QTL. All rights reserved | 155 Hill St. Milford, CT 06460 | 203-367-8777 | sales@QTL.lighting | QTL.lighting

DIRECT BURIAL

Landscape Lighting Installation Instructions

MOUNTING METHOD: **DIRECT BURIAL - Q-TRIX NO DRIVER**
Q-TRIX-R20

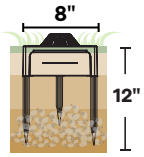

1

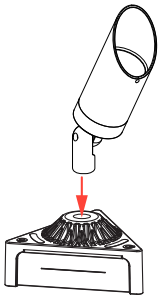

- Remove the cap to expose the 1/2" NPT threads and center knockout (KO), then install the fixture.

IMPORTANT
SQUEEZE SILICONE INTO THE THREADS
BEFORE MOUNTING FIXTURE

2

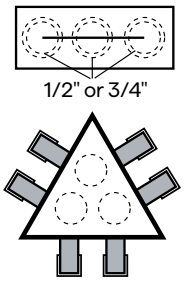

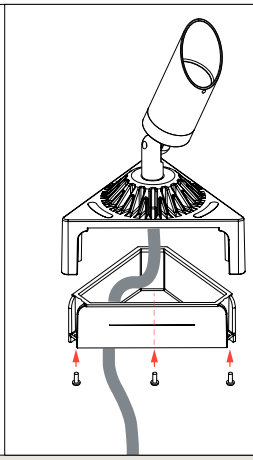

- Complete the wiring and power connection, then secure the bottom of the Q-TRIX unit with the three (3) supplied screws.

3

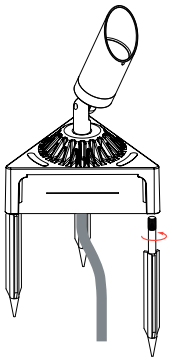

- Install the three (3) stakes to the Q-TRIX-R20 by screwing them in place in the direction shown.

4

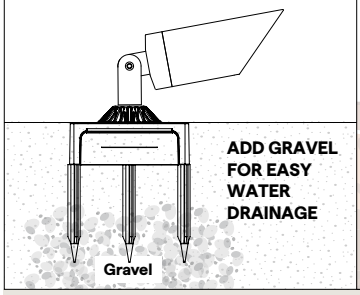

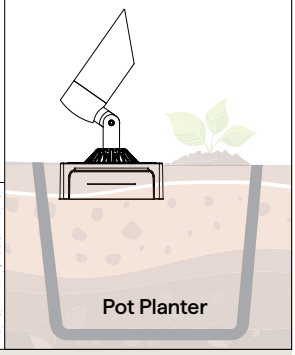

- Add gravel for easy drainage then backfill hole with soil as shown.
- Refer to the Q-TRIX-R20 product page for more detailed installation guidelines.

DO NOT COVER THE LUMINAIRE.

© 2026 QTL. All rights reserved | 155 Hill St. Milford, CT 06460 | 203-367-8777 | sales@QTL.lighting | QTL.lighting

DIRECT BURIAL

Landscape Lighting Installation Instructions

MOUNTING METHOD: **DIRECT BURIAL - Q-TRIX WITH DRIVER**

Q-TRIX-R50

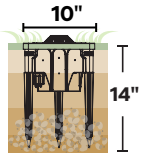

1

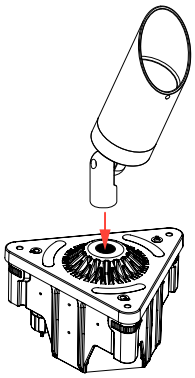

- Remove the cap to expose the 1/2" NPT threads and center knockout (KO), then install the fixture.

IMPORTANT
SQUEEZE SILICONE INTO THE THREADS
BEFORE MOUNTING FIXTURE

2

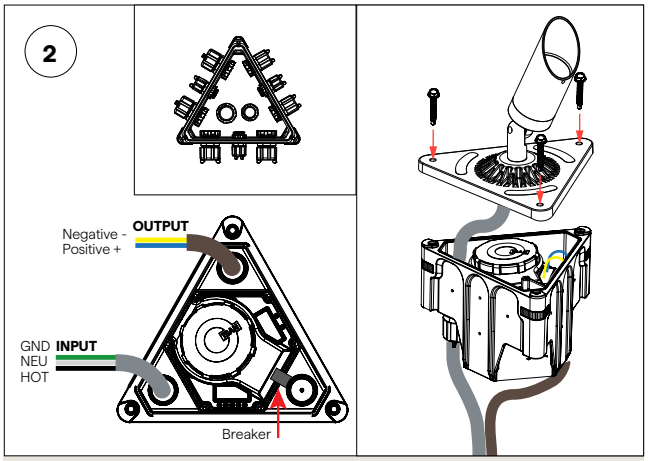

- Complete the wiring and power connection, then secure the bottom of the Q-TRIX unit with the three (3) supplied screws.

3

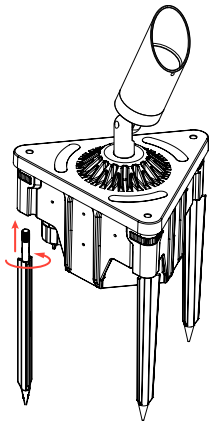

- Install the three (3) stakes to the Q-TRIX-R50 by screwing them in place in the direction shown.

4

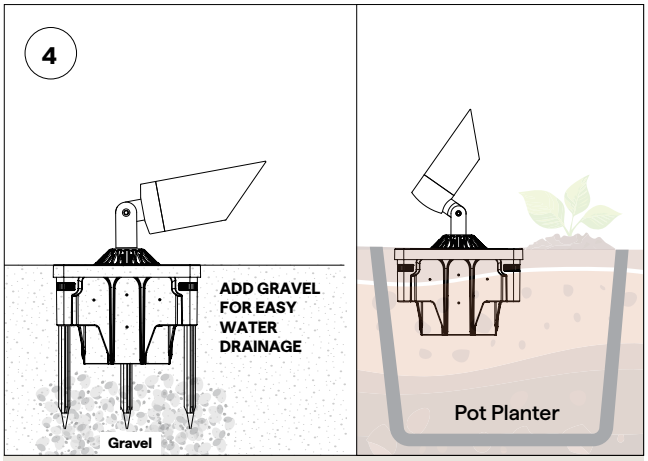

- Add gravel for easy drainage then backfill hole with soil as shown.
- Refer to the Q-TRIX-R50 product page for more detailed installation guidelines.

DO NOT COVER THE LUMINAIRE.

© 2026 QTL. All rights reserved | 155 Hill St. Milford, CT 06460 | 203-367-8777 | sales@QTL.lighting | QTL.lighting