SURFACE & RECESSED J-BOX

Landscape Lighting Installation Instructions

ATTENTION: Please read all instructions BEFORE installation

- Product must be installed by a licensed electrician. Field modifications void the warranty.
- Warranty is valid only with QTL power supplies.
- Diagrams are for representation only and are not to scale.
- Apply silicone around the edge of the canopy for additional water protection.
- Ensure the J-BOX is flush and securely fastened before mounting the canopy.
- J-BOX, conduit, and connectors are supplied by the installer — not included.
- RISK OF FIRE OR INJURY / SAVE THESE INSTRUCTIONS
- Install per NEC and local codes.

METHODS OF INSTALLATION

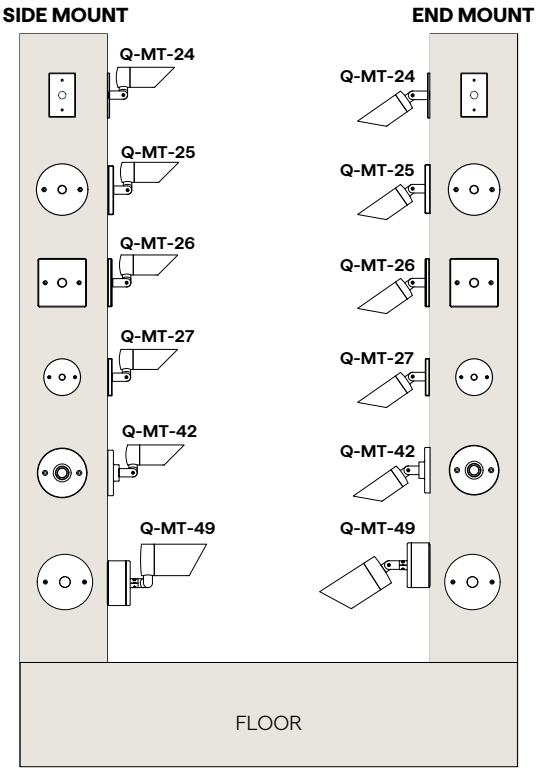

- LUMINAIRE & MOUNT COMPATIBILITY (PAGE 2)
- COMPONENTS & HARDWARE (PAGE 3)
- SURFACE/WALL J-BOX - NO DRIVER (PAGE 4)
- RECESSED J-BOX - NO DRIVER (PAGE 5)
- RECESSED J-BOX - 120V DRIVER (PAGE 6)

© 2026 QTL. All rights reserved | 155 Hill St. Milford, CT 06460 | 203-367-8777 | sales@QTL.lighting | QTL.lighting

SURFACE & RECESSED J-BOX

Landscape Lighting Installation Instructions

LUMINAIRE & MOUNT COMPATIBILITY

	Q-MT-24	Q-MT-25	Q-MT-26	Q-MT-27	Q-MT-42	Q-MT-49BF No Driver	Q-MT-49BF With Driver	Q-MT-49SF No Driver	Q-MT-49SF With Driver
VOYA-EM-1.75-MR11-12VAC	✓	✓	✓	✓	✓				
VOYA-EM/SM-2.5	✓	✓	✓	✓	✓				
VOYA-EM/SM-3.0-PAR20/GU10	✓	✓	✓	✓	✓	✓		✓	
VOYA-EM/SM-3.5-COB-120VAC							✓		✓
Excelsior DL-6		✓		✓					
Excelsior DL-7		✓		✓					
Excelsior DL-8		✓		✓					
Excelsior DL-10		✓		✓					
Excelsior DL-10L		✓		✓					
Excelsior DL-11		✓		✓					
Excelsior DL-11L		✓		✓					
Excelsior DL-12		✓		✓					
Excelsior DL-12L		✓		✓					
Excelsior DL-13		✓		✓					
Excelsior DL-13L		✓		✓					
Excelsior DL-14		✓		✓					
Excelsior DL-14L		✓		✓					
Excelsior DL-28	✓	✓	✓	✓					
Excelsior DL-29	✓	✓	✓	✓					
Excelsior DL-30	✓	✓	✓	✓					
Excelsior UL-28		✓	✓	✓					
Excelsior UL-29		✓	✓	✓					
Excelsior UL-30		✓	✓	✓					
Excelsior WA-1		✓	✓	✓					
Excelsior WA-1L		✓	✓	✓					
Excelsior WA-2		✓	✓	✓					
Excelsior WA-2L		✓	✓	✓					
Excelsior WA-4		✓	✓	✓					
Excelsior WA-4L		✓	✓	✓					
Excelsior WA-5		✓	✓	✓					
Excelsior WA-5L		✓	✓	✓					
Excelsior WA-6		✓	✓	✓					
Excelsior WA-6L		✓	✓	✓					
Excelsior WA-23		✓	✓	✓					
Excelsior WA-24		✓	✓	✓					
Excelsior WA-25		✓	✓	✓					
Excelsior WA-26		✓	✓	✓					
Excelsior WA-27		✓	✓	✓					
Excelsior WA-28		✓	✓	✓					
Excelsior WA-7		✓	✓	✓					
Excelsior WA-7L		✓	✓	✓					
Excelsior WA-8		✓	✓	✓					
Excelsior WA-8L		✓	✓	✓					
Excelsior WA-10		✓	✓	✓					
Excelsior WA-10L		✓	✓	✓					
Excelsior WA-12		✓	✓	✓					
Excelsior WA-12L		✓	✓	✓					
Excelsior WA-29		✓	✓	✓					
Excelsior WA-30		✓	✓	✓					
Excelsior WA-31		✓	✓	✓					
Excelsior WA-38		✓	✓	✓					
Excelsior WA-39		✓	✓	✓					
Excelsior WA-40		✓	✓	✓					

© 2026 QTL. All rights reserved | 155 Hill St. Milford, CT 06460 | 203-367-8777 | sales@QTL.lighting | QTL.lighting

SURFACE & RECESSED J-BOX

Landscape Lighting Installation Instructions

SURFACE/WALL J-BOX PLATES

Q-MT-24

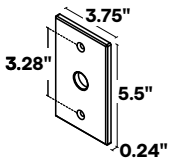

Q-MT-42

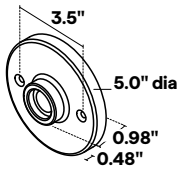

RECESSED J-BOX PLATES

Q-MT-25

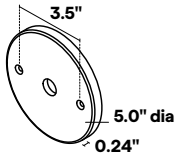

Q-MT-26

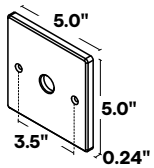

Q-MT-49

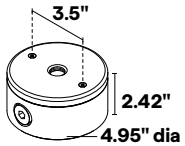

With Water Protection

Q-MT-27

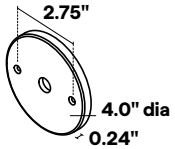

RECOMMENDED JUNCTION BOXES (BY OTHERS)

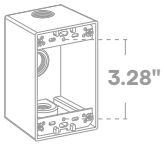

6-32x1.25"

SINGLE GANG
WEATHERPROOF J-BOX

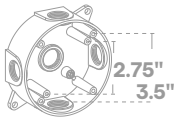

10-24x 1.25"

4/O
WEATHERPROOF J-BOX

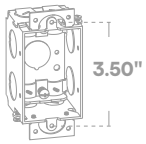

6-32×1.25"

SINGLE GANG
RECESSED J-BOX

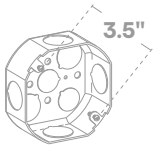

8-32x1.25"

4/O
RECESSED J-BOX

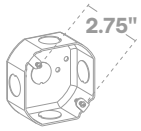

8-32x1.25"

3/O
RECESSED J-BOX

COMPONENTS & HARDWARE

PROVIDED HARDWARE

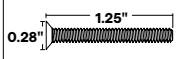

#PN	QTY
Q-MT-24	2
Q-MT-49	2

6-32x1.25"

FLAT HEAD SCREW

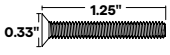

#PN	QTY
Q-MT-25	2
Q-MT-26	2
Q-MT-27	2

8-32x1.25"

FLAT HEAD SCREW

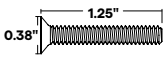

#PN	QTY
Q-MT-42	2

10-24x 1.25"

FLAT HEAD SCREW



#PN	QTY
Q-MT-42	1

10-32x3/16"

SET SCREW

SUGGESTED TOOLS/MATERIALS



#PN	QTY
Q-MT-24	1
Q-MT-25	1
Q-MT-26	1
Q-MT-27	1

1/2-14 NPS HEX NUT

HEX NUT / JAM NUT

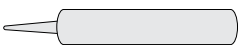

Waterproof Silicone

ALL PURPOSE SILICONE

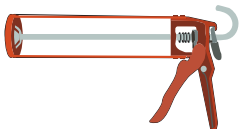

CAULKING GUN

© 2026 QTL. All rights reserved | 155 Hill St. Milford, CT 06460 | 203-367-8777 | sales@QTL.lighting | QTL.lighting

SURFACE & RECESSED J-BOX

Landscape Lighting Installation Instructions

MOUNTING METHOD: **SURFACE/WALL J-BOX - NO DRIVER**

Q-MT-24, Q-MT-42

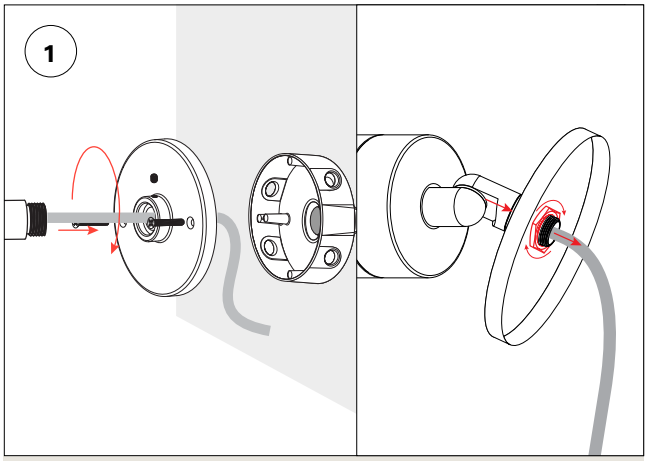

- Prepare the J-BOX by removing knockouts for wire entry
- Install the surface-mount J-BOX on the wall following the manufacturer's instructions.
- Bring the power supply wires through the J-BOX connectors.
- Q-MT-42: Install the fixture onto the canopy and screw it on until seated.
- Q-MT-24: Install the fixture onto the canopy and secure it with the provided jam nut.

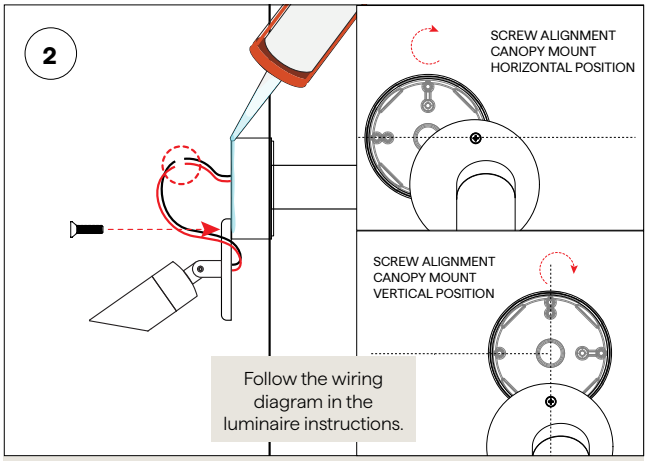

- Mount one side of the canopy with the provided screws.
- Cut the wires to length as needed and splice the fixture and J-BOX wires together.
- Add a bead of silicone around the trim of the J-BOX for additional water protection as needed.

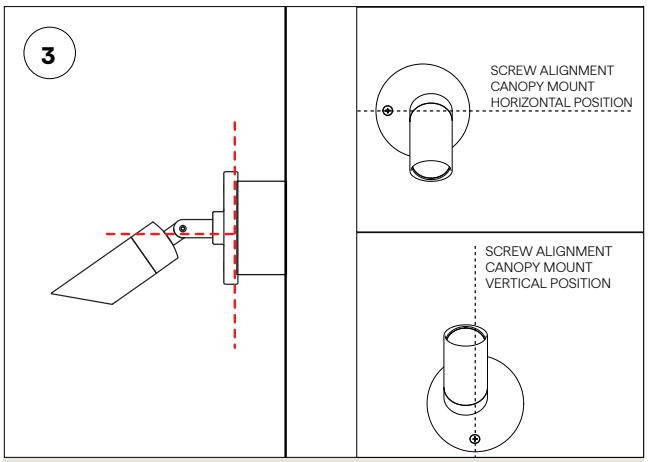

- Tuck the excess wires into the J-BOX, rotate the canopy into position, and install the provided screw into the J-BOX.

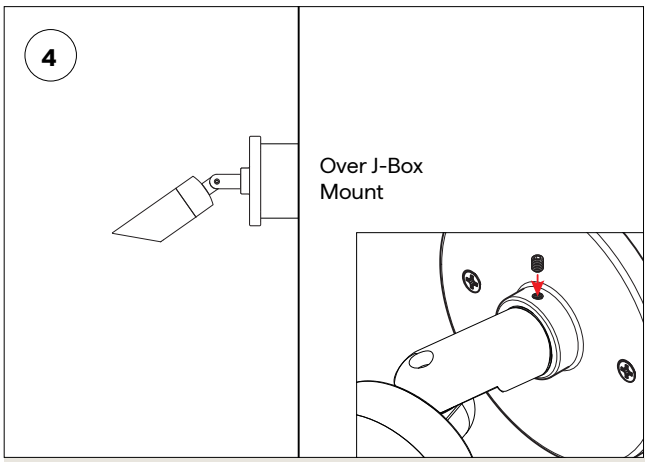

- Q-MT-42: The fixture can be rotationally adjusted slightly with the provided set screw on the canopy. Other canopies do not have this feature.
- Installation complete.

© 2026 QTL. All rights reserved | 155 Hill St. Milford, CT 06460 | 203-367-8777 | sales@QTL.lighting | QTL.lighting

MOUNTING METHOD: **RECESSED J-BOX - NO DRIVER**

Q-MT-25, Q-MT-26, Q-MT-27, Q-MT-49BF

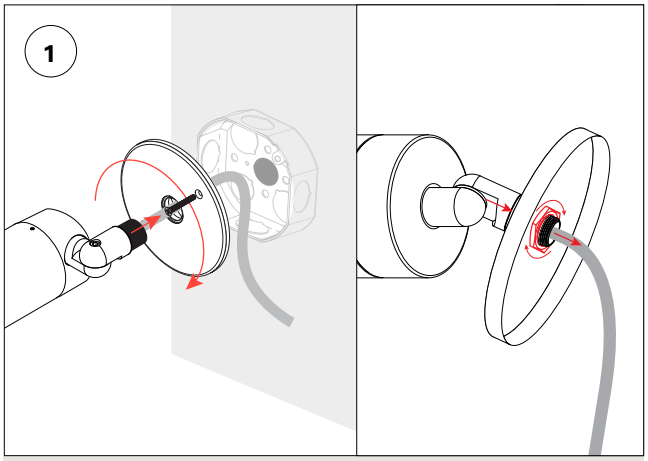

- Prepare the J-BOX by removing knockouts for wire entry.
- Install the recessed J-BOX behind the surface following the manufacturer's instructions.
- Bring the power supply wires through the J-BOX connectors.
- Q-MT-49: Install the fixture onto the canopy and screw it on until seated.
- Q-MT-25, Q-MT-26, Q-MT-27: Install the fixture onto the canopy and secure it with the provided jam nut.

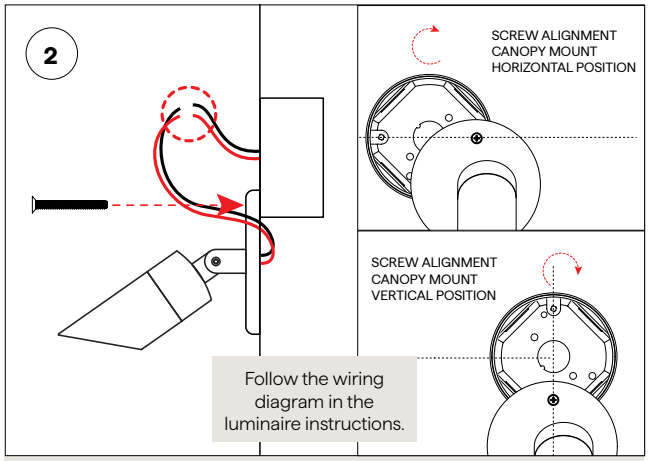

- Mount one side of the canopy with the provided screws.
- Cut the wires to length as needed and splice the fixture and J-BOX wires together.

NOTE: *The canopy must completely cover the J-BOX and the excess hole cutout. Mounting screws are not provided. Secure the Q-MT-49 base using #10 mounting screws (by others).*

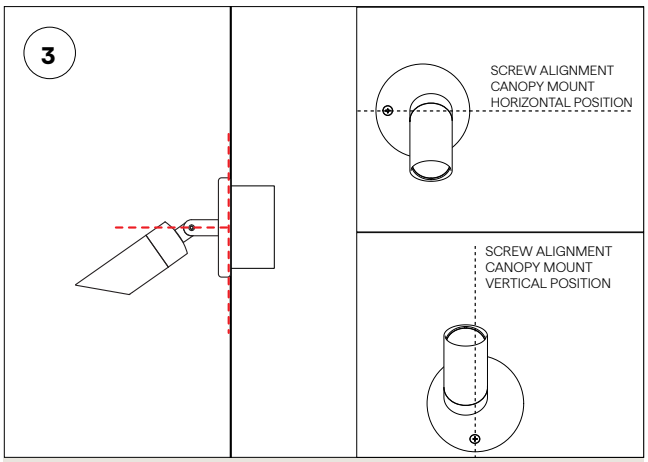

- Tuck the excess wires into the J-BOX, rotate the canopy into position, and install the provided screw into the J-BOX.

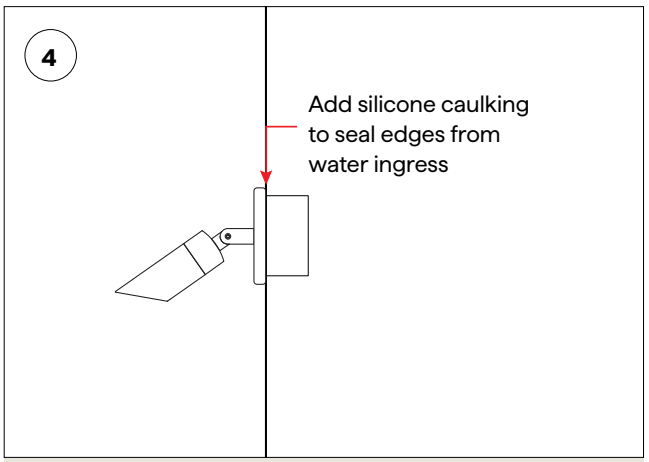

- Add additional silicone caulking for extra protection against water ingress.
- Installation complete.

© 2026 QTL. All rights reserved | 155 Hill St. Milford, CT 06460 | 203-367-8777 | sales@QTL.lighting | QTL.lighting

SURFACE & RECESSED J-BOX

Landscape Lighting Installation Instructions

MOUNTING METHOD: **RECESSED J-BOX - 120V DRIVER**

Q-MT-49BF, Q-MT-49SF

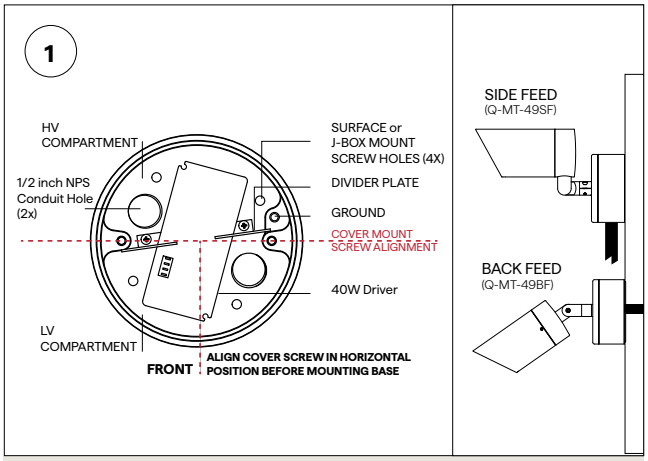

- Prepare the J-BOX by removing knockouts for wire entry.
- Install the recessed J-BOX behind the surface following the manufacturer's instructions.
- Bring the power supply wires through the J-BOX connectors.

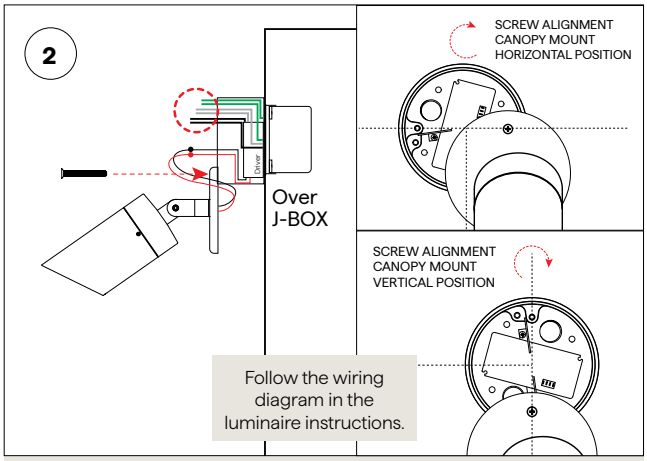

- Remove one canopy screw and rotate the canopy to access the wire compartment.
- Mount the VOYA 3.5" base (Q-MT-49) to the recessed J-BOX using the manufacturer's suggested hardware.
- Cut the wires to length as needed and splice the fixture and power supply / dimming wires together. (Reference the VOYA 3.5" COB luminaire instructions for the specific wiring diagram.)

NOTE: *The canopy must completely cover the J-BOX and the excess hole cutout. Mounting screws are not provided. Secure the Q-MT-49 base using #10 mounting screws (by others).*

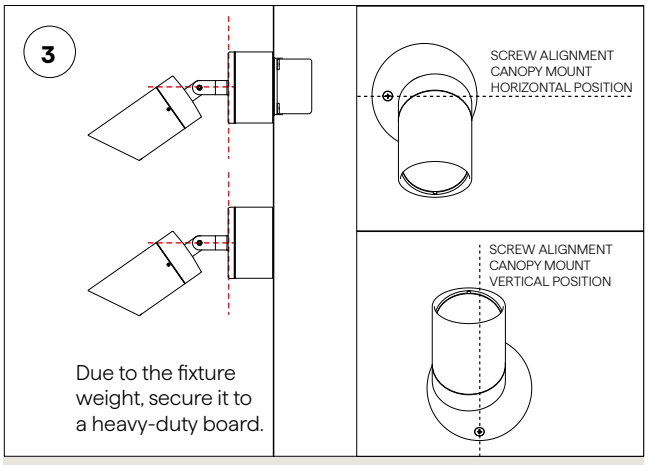

- Tuck the excess wires into the Q-MT-49 base, rotate the canopy back into position, and secure it with the provided screw.

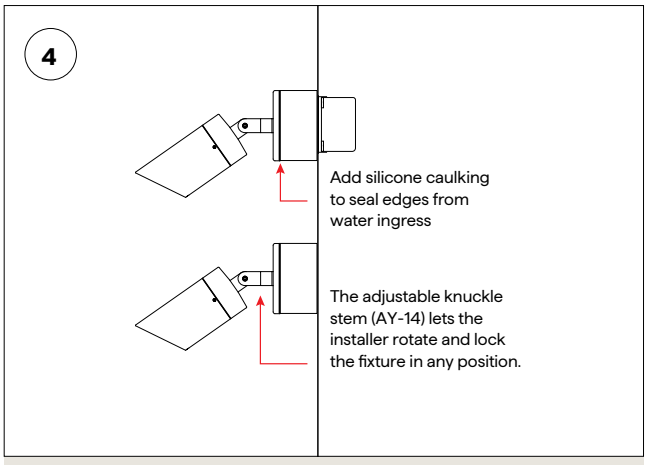

- Add additional silicone caulking for extra protection against water ingress.
- Installation complete.

© 2026 QTL. All rights reserved | 155 Hill St. Milford, CT 06460 | 203-367-8777 | sales@QTL.lighting | QTL.lighting