# SURFACE/WALL

Landscape Lighting Installation Instructions

## ⚠ ATTENTION: Please read all instructions BEFORE installation

- Product must be installed by a licensed electrician. Field modifications void the warranty.
- Warranty is valid only with QTL power supplies.
- Diagrams are for representation only and are not to scale.
- Apply silicone around the edge of the canopy for additional water protection.
- Ensure the mounting surface is plumb and can support the fixture weight.
- Use the appropriate wire gauge for the run length.
- Use a liquid-tight connector for 120V wire entry.
- RISK OF FIRE OR INJURY / SAVE THESE INSTRUCTIONS
- Install per NEC and local codes.

## METHODS OF INSTALLATION

**SIDE MOUNT**

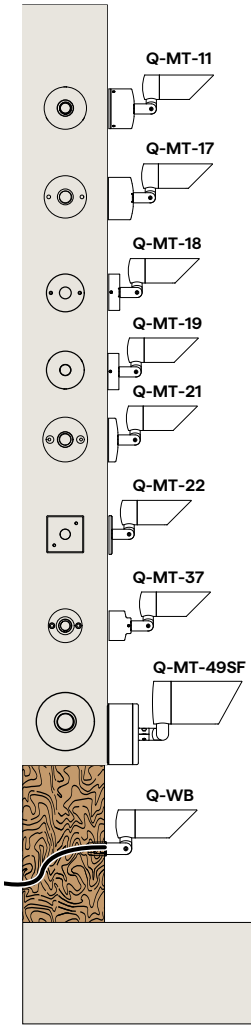


**END MOUNT**

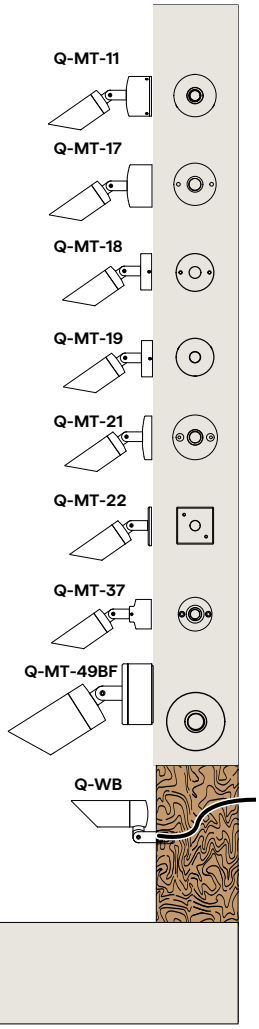



- LUMINAIRE & MOUNT COMPATIBILITY (PAGE 2)
- COMPONENTS & HARDWARE (PAGE 3)
- SURFACE/WALL - NO DRIVER (PAGE 4-5)
- SURFACE/WALL - WITH DRIVER (PAGE 6)
- WOOD BEAM (PAGE 7)




© 2026 QTL. All rights reserved | 155 Hill St. Milford, CT 06460 | 203-367-8777 | sales@QTL.lighting | QTL.lighting

## LUMINAIRE & MOUNT COMPATIBILITY

| | Q-MT-11 | Q-MT-17 | Q-MT-18 | Q-MT-19 | Q-MT-21 | Q-MT-22 | Q-MT-37 | Q-MT-49BF No Driver | Q-MT-49BF With Driver | Q-MT-49SF No Driver | Q-MT-49SF With Driver | Q-WB |
|---|---|---|---|---|---|---|---|---|---|---|---|---|
| VOYA-EM-1.75-MR11-12VAC | ✓ | ✓ | ✓ | ✓ | ✓ | ✓ | ✓ | | | | | ✓ |
| VOYA-EM/SM-2.5 | ✓ | ✓ | ✓ | ✓ | ✓ | ✓ | ✓ | | | | | ✓ |
| VOYA-EM/SM-3.0-PAR20/GU10 | | | | | | | | ✓ | | ✓ | | |
| VOYA-EM/SM-3.5-COB-120VAC | | | | | | | | | ✓ | | ✓ | |
| Excelsior DL-6 | ✓ | | | | ✓ | | | | | | | |
| Excelsior DL-7 | ✓ | | | | ✓ | | | | | | | |
| Excelsior DL-8 | ✓ | | | | ✓ | | | | | | | |
| Excelsior DL-10 | ✓ | | | | ✓ | | | | | | | |
| Excelsior DL-10L | ✓ | | | | ✓ | | | | | | | |
| Excelsior DL-11 | ✓ | | | | ✓ | | | | | | | |
| Excelsior DL-11L | ✓ | | | | ✓ | | | | | | | |
| Excelsior DL-12 | ✓ | | | | ✓ | | | | | | | |
| Excelsior DL-12L | ✓ | | | | ✓ | | | | | | | |
| Excelsior DL-13 | ✓ | | | | ✓ | | | | | | | |
| Excelsior DL-13L | ✓ | | | | ✓ | | | | | | | |
| Excelsior DL-14 | ✓ | | | | ✓ | | | | | | | |
| Excelsior DL-14L | ✓ | | | | ✓ | | | | | | | |



© 2026 QTL. All rights reserved | 155 Hill St. Milford, CT 06460 | 203-367-8777 | sales@QTL.lighting | QTL.lighting

# SURFACE/WALL

Landscape Lighting Installation Instructions

**Q-MT-11**

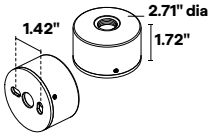


With Water Protection

**Q-MT-17**

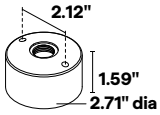


**Q-MT-18**

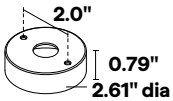


**Q-MT-19**

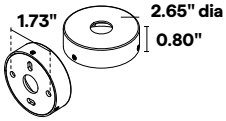


With Water Protection

**Q-MT-21**

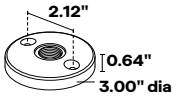


**Q-MT-22**

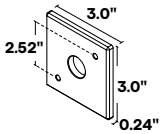


**Q-MT-37**

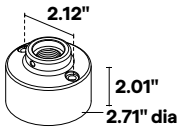


**Q-WB**

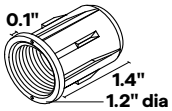


Wood Beam Mount

**Q-MT-49BF**

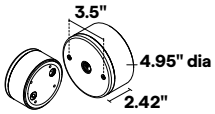


With Water Protection

**Q-MT-49SF**

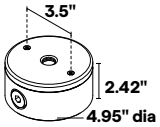


With Water Protection

## COMPONENTS & HARDWARE

**PROVIDED HARDWARE**

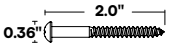


| #PN | QTY |
|---|---|
| Q-MT-17 | 2 |
| Q-MT-18 | 2 |

#10-3/16x2"

ROUND HEAD SCREW

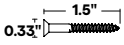


| #PN | QTY |
|---|---|
| Q-MT-21 | 2 |

#8-3/16x1.5"

FLAT HEAD SCREW

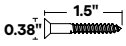


| #PN | QTY |
|---|---|
| Q-MT-22 | 2 |

#10-3/16x1.5"

FLAT HEAD SCREW

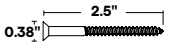


| #PN | QTY |
|---|---|
| Q-MT-37 | 2 |

#10-3/16x2.5"

FLAT HEAD SCREW

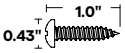


| #PN | QTY |
|---|---|
| Q-MT-11 | 2 |

#12-SS Round Head 1.0"

PHILLIPS ROUND HEAD SCREW

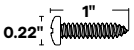


| #PN | QTY |
|---|---|
| Q-MT-19 | 2 |

316 SS Round Head 1.0"

ROUND HEAD SCREW




| #PN | QTY |
|---|---|
| Q-MT-11 | 3 |
| Q-MT-19 | 3 |
| Q-MT-37 | 1 |

10-32x3/16"

SET SCREW

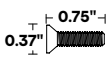


| #PN | QTY |
|---|---|
| Q-MT-49 | 2 |

10-32x3/4"

HEX FLAT HEAD SCREW



| #PN | QTY |
|---|---|
| Q-MT-18 | 1 |
| Q-MT-19 | 1 |
| Q-MT-22 | 1 |

1/2-14 NPS HEX NUT

HEX NUT / JAM NUT

**SUGGESTED TOOLS/MATERIALS**



Waterproof Silicone

ALL PURPOSE SILICONE

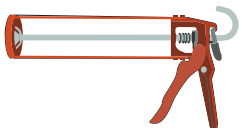

CAULKING GUN



© 2026 QTL. All rights reserved | 155 Hill St. Milford, CT 06460 | 203-367-8777 | sales@QTL.lighting | QTL.lighting

## MOUNTING METHOD: **SURFACE/WALL - NO DRIVER**

Q-MT-11, Q-MT-17, Q-MT-18, Q-MT-19, Q-MT-21, Q-MT-22, Q-MT-37

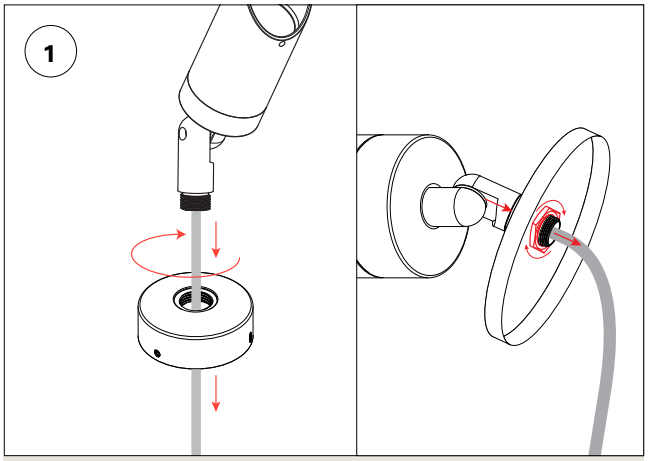


- Feed the fixture lead wire down through the canopy.
- Q-MT-11, Q-MT-17, Q-MT-21, Q-MT-37: Install the fixture onto the canopy and screw it on until seated.
- Q-MT-18, Q-MT-19, Q-MT-22: Install the fixture onto the canopy and secure it with the provided jam nut.

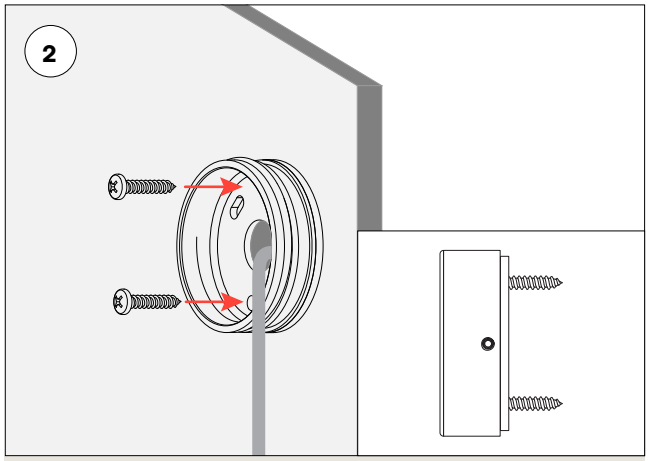


- Align the mounting screw holes in the vertical or horizontal position before mounting the base/canopy.
- Hold the base/canopy against the mounting surface and secure it with the two provided screws. Confirm the surface is level and can support the fixture weight.

***NOTE:*** *Not all mounting methods include both a base and a canopy.*

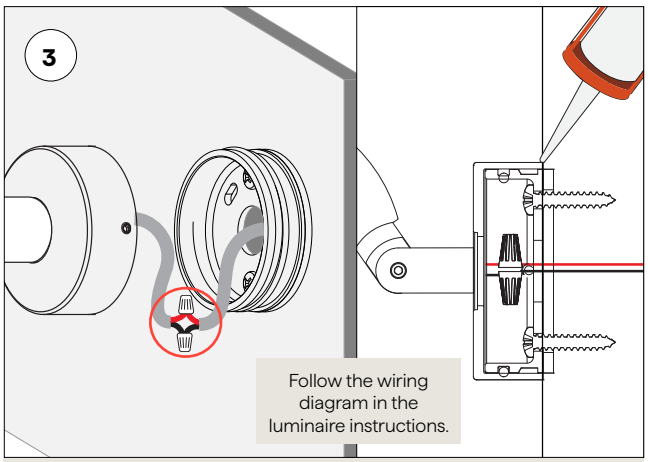


- Cut the wires to length as needed and splice the fixture and line voltage / power supply wires together. (Reference the luminaire instructions for the specific wiring diagram.)

***NOTE:*** *Silicone can be applied to the edge of the canopy before tightening the screws for additional water protection.*

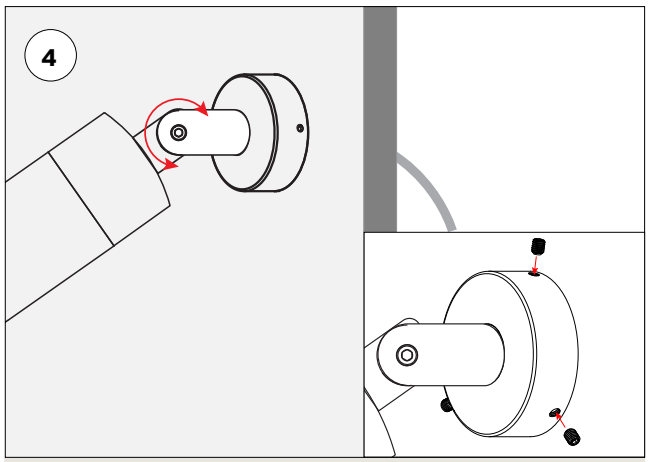


- Q-MT-37: The fixture can be rotationally adjusted slightly with the provided set screw on the canopy. Other canopies do not have this feature.
- Q-MT-11, Q-MT-19: Tighten the provided set screws to secure the fixture in place.
- Installation complete.



© 2026 QTL. All rights reserved | 155 Hill St. Milford, CT 06460 | 203-367-8777 | sales@QTL.lighting | QTL.lighting

## MOUNTING METHOD: **SURFACE/WALL - NO DRIVER**

Q-MT-49BF, Q-MT-49SF

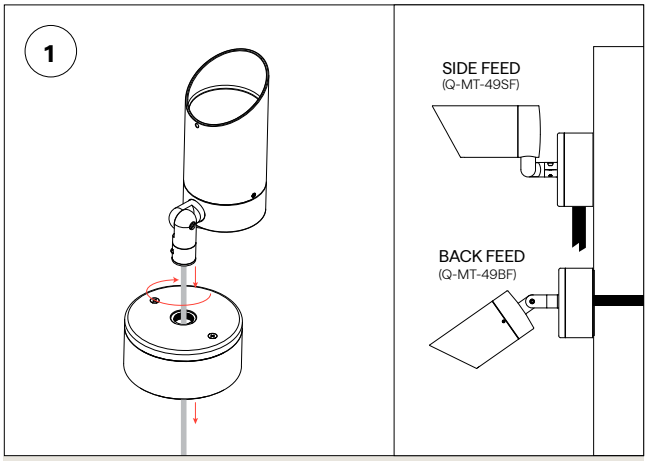


- Remove one canopy screw and rotate the canopy to access the wire compartment.
- Back feed (Q-MT-49BF): Feed the wire through the Q-MT-49 base knockout. Connect per NEC code.
- Side feed (Q-MT-49SF): Feed the wire through the Q-MT-49 base knockout. Connect per NEC code.
- Mount the Q-MT-49 base onto the surface using wood screws (by others). Confirm the surface is level and can support the fixture weight.

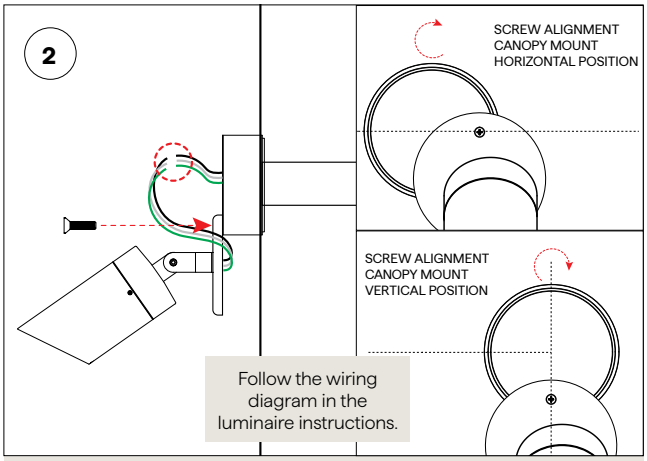


- Mount one side of the canopy with the provided screws.
- Cut the wires to length as needed and splice the fixture and line voltage wires together.

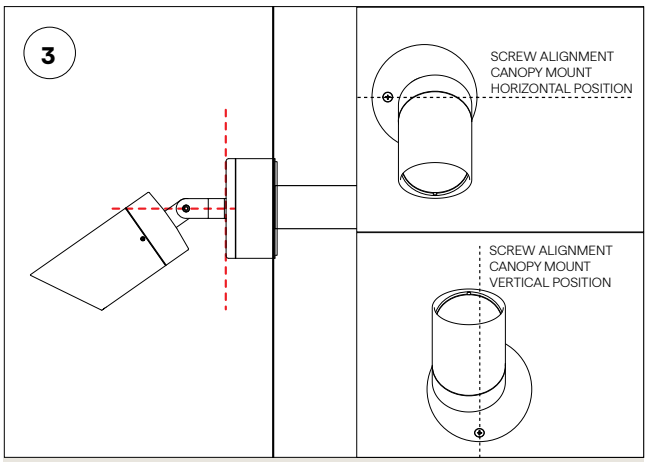


- Tuck the excess wires into the Q-MT-49 base, rotate the canopy back into position, and secure it with the provided screw.

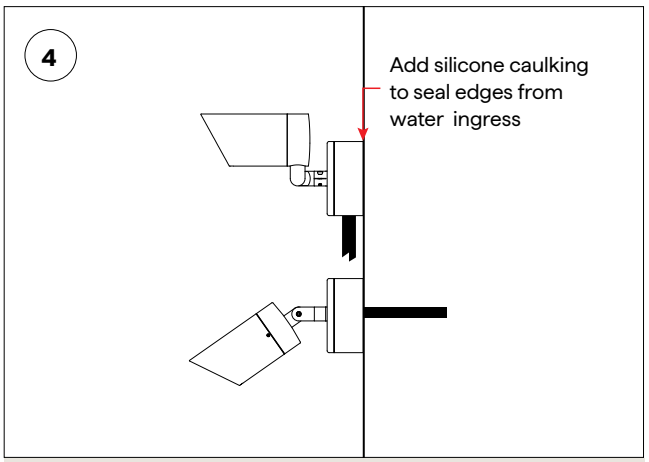


- Add additional silicone caulking for extra protection against water ingress.
- Installation complete.



© 2026 QTL. All rights reserved | 155 Hill St. Milford, CT 06460 | 203-367-8777 | sales@QTL.lighting | QTL.lighting

# SURFACE/WALL

Landscape Lighting Installation Instructions

## MOUNTING METHOD: **SURFACE/WALL - 120V DRIVER**

Q-MT-49BF, Q-MT-49SF

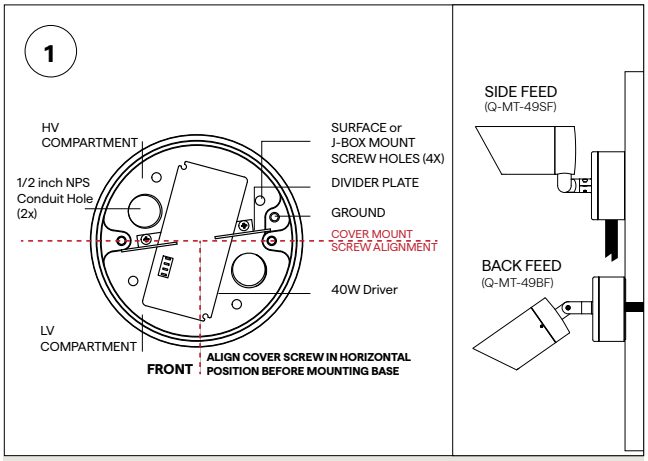


- Remove one canopy screw and rotate the canopy to access the wire compartment.
- Back feed (Q-MT-49BF): Feed the wire through the Q-MT-49 base knockout. Connect per NEC code.
- Side feed (Q-MT-49SF): Feed the wire through the Q-MT-49 base knockout. Connect per NEC code.
- Mount the Q-MT-49 base onto the surface using wood screws (by others). Confirm the surface is level and can support the fixture weight.

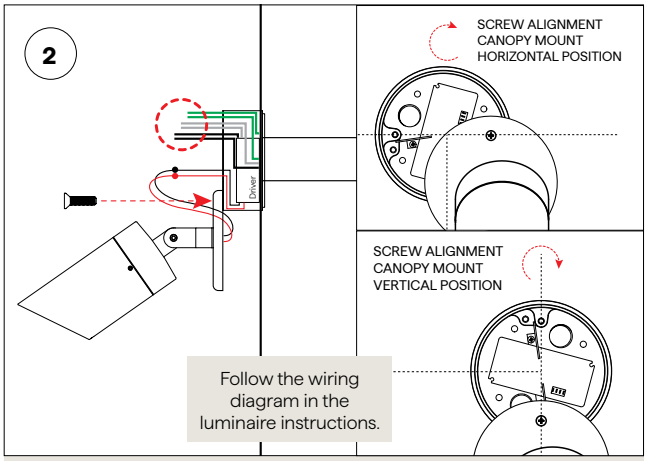


- Mount one side of the canopy with the provided screws.
- Cut the wires to length as needed and splice the fixture and power supply / dimming wires together. (Reference the VOYA 3.5" COB luminaire instructions for the specific wiring diagram.)

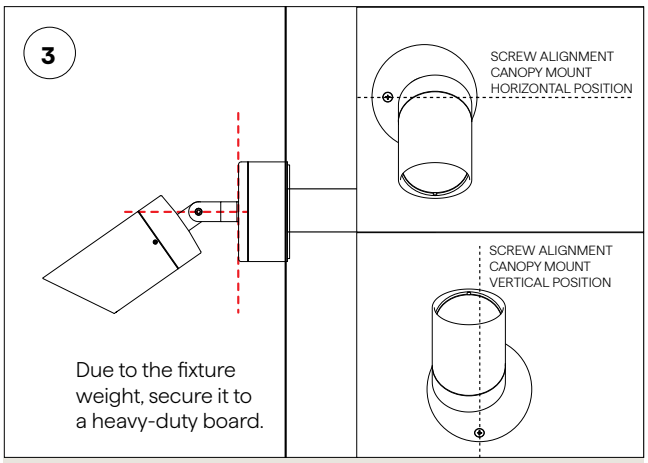


- Tuck the excess wires into the Q-MT-49 base, rotate the canopy back into position, and secure it with the provided screw.

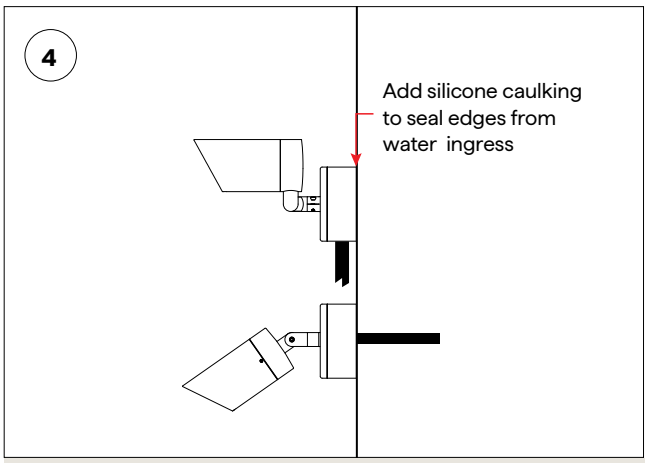


- Add additional silicone caulking for extra protection against water ingress.
- Installation complete.



© 2026 QTL. All rights reserved | 155 Hill St. Milford, CT 06460 | 203-367-8777 | sales@QTL.lighting | QTL.lighting

MOUNTING METHOD: **WOOD BEAM - NO DRIVER**
Q-WB

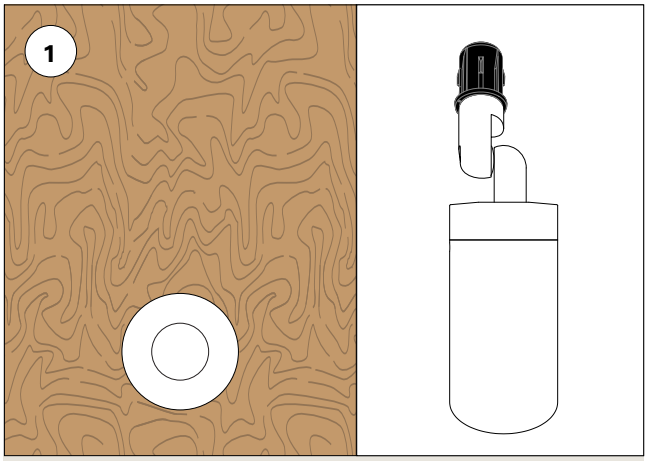


- Drill a 1" diameter hole, 3" deep. Then drill a wire access hole to route the fixture cable through the wood beam.
- Rotate the fixture into the Q-WB mount until fully seated.

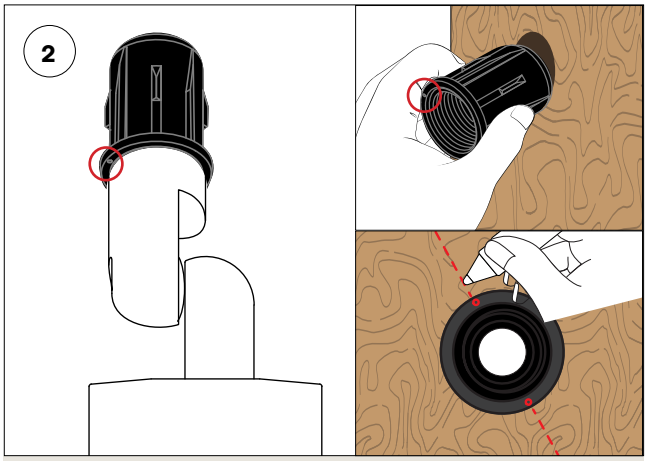


- Orient the fixture in the desired position, then use the indicator dots as reference markers to mark the final fixture position.
- Remove the fixture from the Q-WB mount then proceed to step 3.

***NOTE:*** *The Q-WB mount can only be inserted once and cannot be adjusted afterward.*

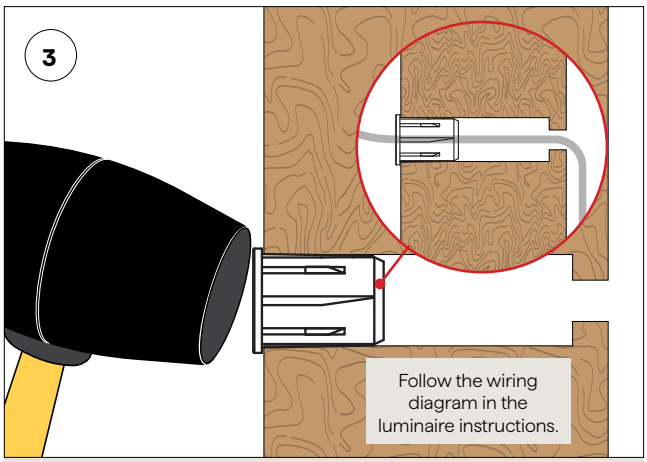


- Ensure the indicator dots are aligned with the reference marks.
- Tap the Q-WB mount into the wood with a mallet until it is flush, as shown.
- Cut the wires to length as needed and splice the fixture and power supply wires together. (Reference the luminaire instructions for the specific wiring diagram.)

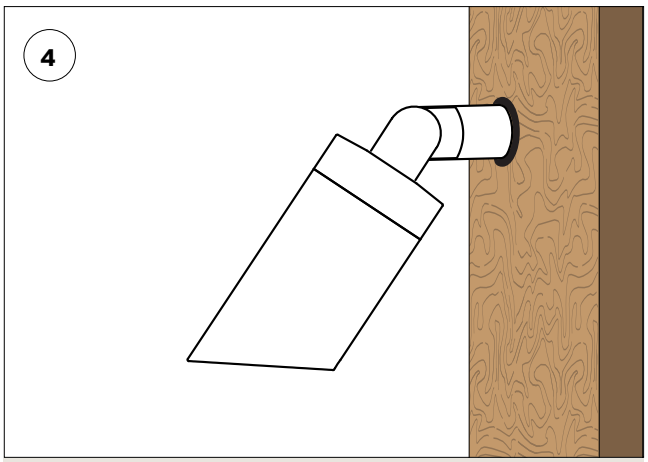


- Rotate the fixture into the Q-WB mount until fully seated.
- Installation complete.

***NOTE:*** *The Q-WB mount can only be inserted once and cannot be adjusted afterward.*



© 2026 QTL. All rights reserved | 155 Hill St. Milford, CT 06460 | 203-367-8777 | sales@QTL.lighting | QTL.lighting