TREE MOUNT

Landscape Lighting Installation Instructions

ATTENTION: Please read all instructions BEFORE installation

- Product must be installed by a licensed electrician. Field modifications void the warranty.
- Warranty is valid only with QTL power supplies.
- Diagrams are for representation only and are not to scale.
- Wrap the nylon ratchet strap around the tree. DO NOT OVERTIGHTEN — overtightening can damage the tree.
- Use the provided or recommended bolts to attach mounts to the tree.
- Use a liquid-tight connector for 120V wire entry.
- RISK OF FIRE OR INJURY / SAVE THESE INSTRUCTIONS
- Install per NEC and local codes.

METHODS OF INSTALLATION

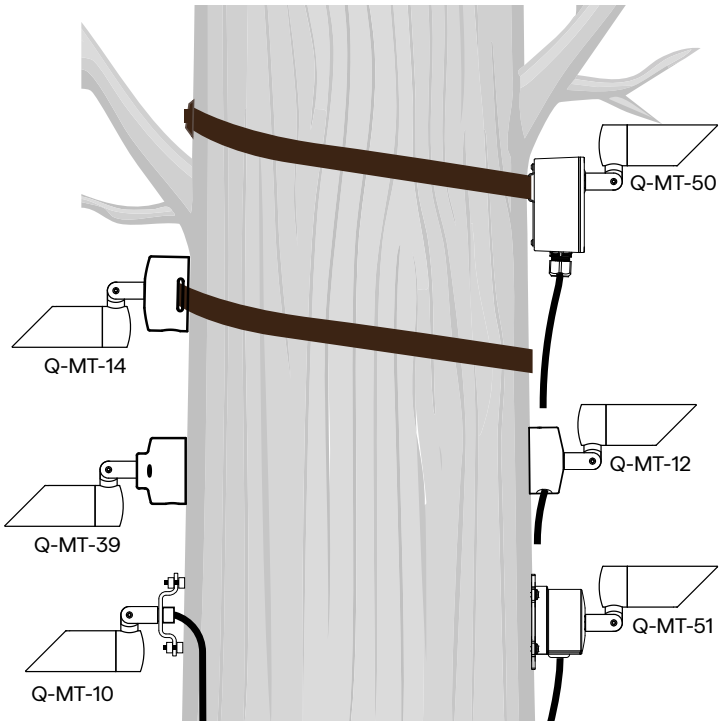

- COMPONENTS & HARDWARE (PAGE 2)
- TREE MOUNT - NO DRIVER (PAGE 3-4)
- TREE MOUNT - 120V DRIVER (PAGE 5)

LUMINAIRE & MOUNT COMPATIBILITY

	Q-MT-10	Q-MT-12	Q-MT-14	Q-MT-39	Q-MT-50 No Driver	Q-MT-50 With Driver	Q-MT-51
VOYA-EM-1.75-MR11-12VAC	✓	✓	✓	✓	✓		✓
VOYA-EM/SM-2.5	✓	✓	✓	✓	✓		✓
VOYA-EM/SM-3.0-PAR20/GU10					✓		✓
VOYA-EM/SM-3.5-COB-120VAC						✓	

© 2026 QTL. All rights reserved | 155 Hill St. Milford, CT 06460 | 203-367-8777 | sales@QTL.lighting | QTL.lighting

TREE MOUNT

Landscape Lighting Installation Instructions

Q-MT-10

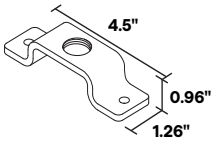

Q-MT-12

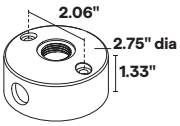

Q-MT-14

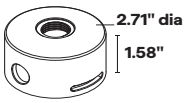

With Tree Strap

Q-MT-39

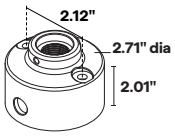

Q-MT-51

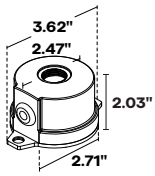

With Water Protection

Q-MT-50

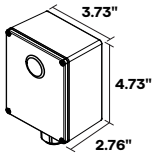

With Water Protection & Tree Strap

No Driver | With Driver

COMPONENTS & HARDWARE

PROVIDED HARDWARE

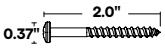

#PN	QTY
Q-MT-12	2

#10-3/16x2"

PHILLIPS ROUND HEAD SCREW



#PN	QTY
Q-MT-50	4
Q-MT-51	3

6-32x0.5"

FLAT HEAD SCREW

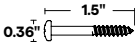

#PN	QTY
Q-MT-51	2

#10-3/16x1.5"

PHILLIPS ROUND HEAD SCREW



1/4-20 NUT

#PN	QTY
Q-MT-10	4

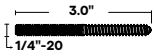

1/4-20x3"

#PN	QTY
Q-MT-10	2

HANGER BOLT

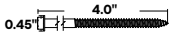

#PN	QTY
Q-MT-39	2

1/4"-20X3"

HEX BOLT SCREW



#PN	QTY
Q-MT-10	1
Q-MT-50	1

1/2-14 NPS HEX NUT

HEX NUT / JAM NUT



#PN	QTY
Q-MT-14	1
Q-MT-50	1

Nylon Strap Ratchet

TREE MOUNT STRAP

RECOMMENDED HARDWARE

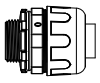

#PN	QTY
Q-MT-50	1

1/2" Liquid-Tight Connector
(By Others)

CONDUIT CONNECTOR

© 2026 QTL. All rights reserved | 155 Hill St. Milford, CT 06460 | 203-367-8777 | sales@QTL.lighting | QTL.lighting

TREE MOUNT

Landscape Lighting Installation Instructions

MOUNTING METHOD: **TREE MOUNT - NO DRIVER**

Q-MT-10, Q-MT-12, Q-MT-14, Q-MT-39, Q-MT-51

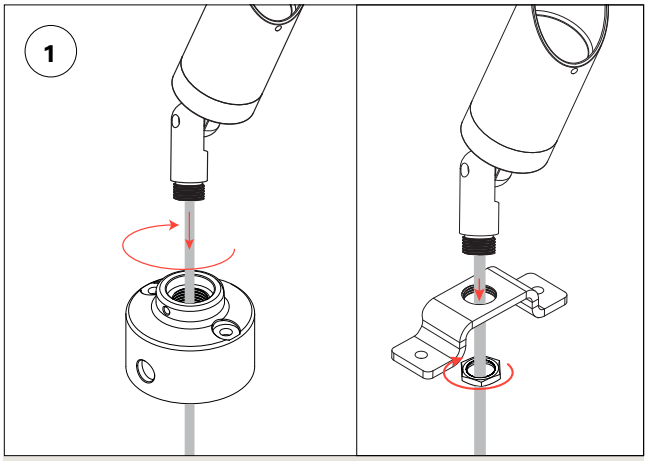

- Feed the fixture lead wire down through the canopy.
- Q-MT-12, Q-MT-14, Q-MT-39, Q-MT-51: Install the fixture onto the canopy and screw it on until seated.
- Q-MT-10: Install the fixture onto the canopy and secure it with the provided jam nut.

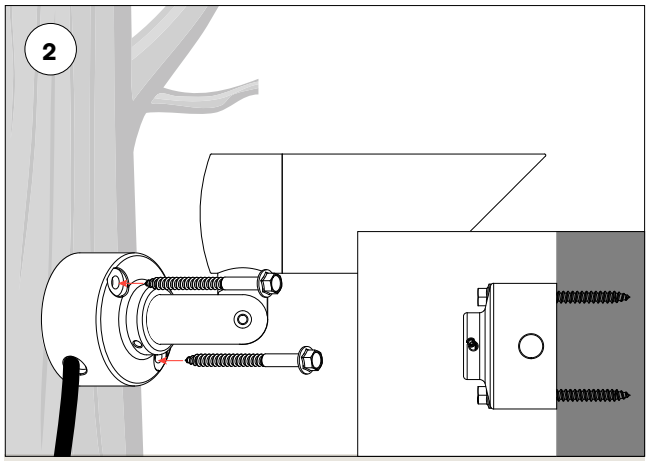

- Align the mounting screw holes in the vertical or horizontal position before mounting the base/canopy.
- Hold the base/canopy against the mounting surface and secure it with the two provided screws.

NOTE: *Not all mounting methods include both a base and a canopy.*

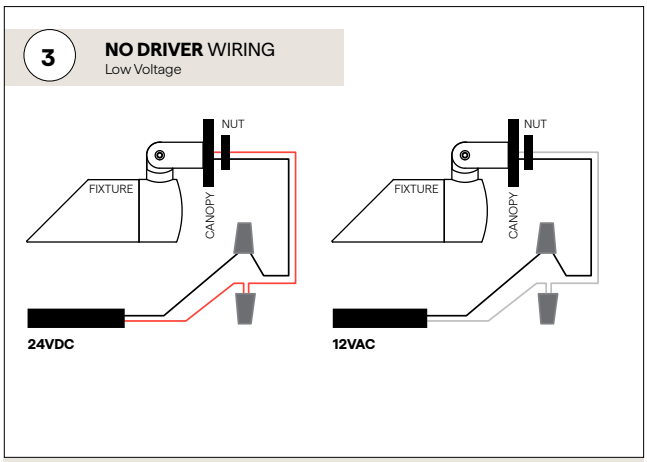

- If the mount has a wire hole, run the power supply wire through the hole before splicing. (Reference the luminaire instructions for wiring details).
- Cut the fixture wire to length as needed and splice the fixture and power supply wires together with liquid-tight wire nuts (by others).

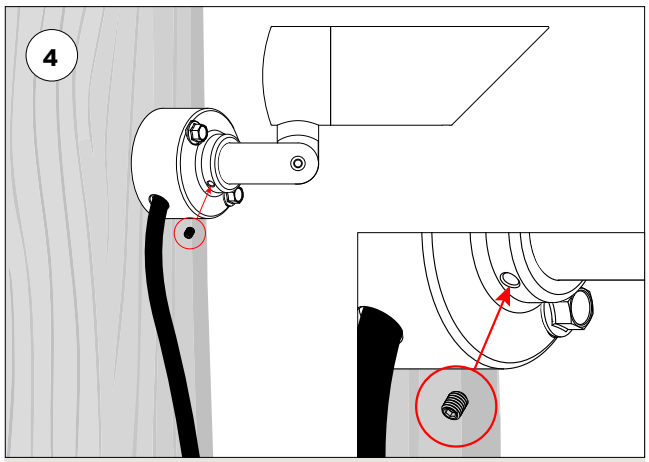

- Q-MT-39: After installation, the fixture can be rotationally adjusted slightly with the provided set screw on the canopy. Other canopies do not have this feature.
- Installation complete.

© 2026 QTL. All rights reserved | 155 Hill St. Milford, CT 06460 | 203-367-8777 | sales@QTL.lighting | QTL.lighting

TREE MOUNT

Landscape Lighting Installation Instructions

MOUNTING METHOD: **TREE MOUNT - NO DRIVER**
Q-MT-50

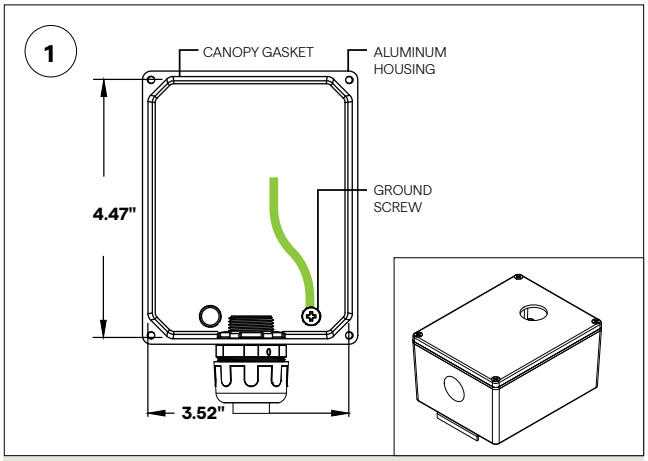

- Remove the four (4) canopy screws and lift off the canopy gasket. Route the power supply cable into the housing through recommended liquid-tight connector.

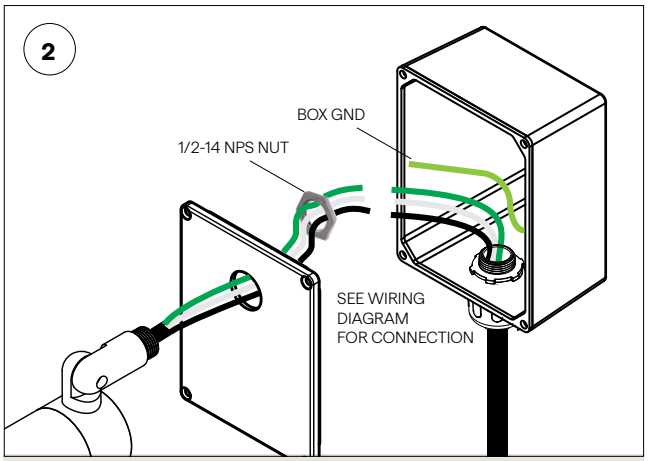

- Mount the fixture onto the canopy with the 1/2-14 jam nut.
- Splice the wires together with wire nuts (by others). See the luminaire instructions for wiring details.
- Reinstall the canopy.

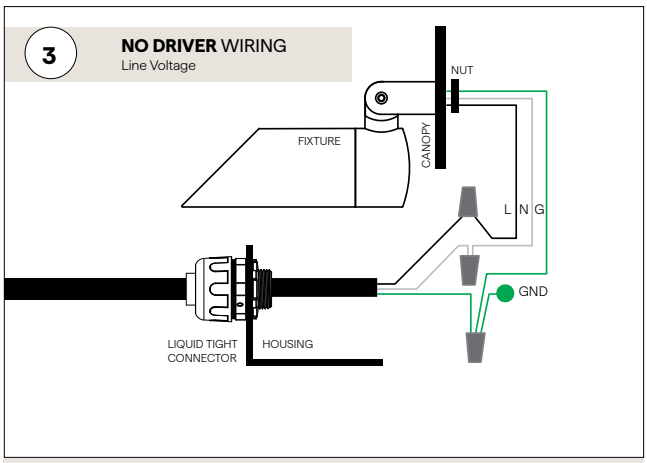

- Cut the fixture wire to length as needed and splice the fixture and power supply wires together with liquid-tight wire nuts (by others).

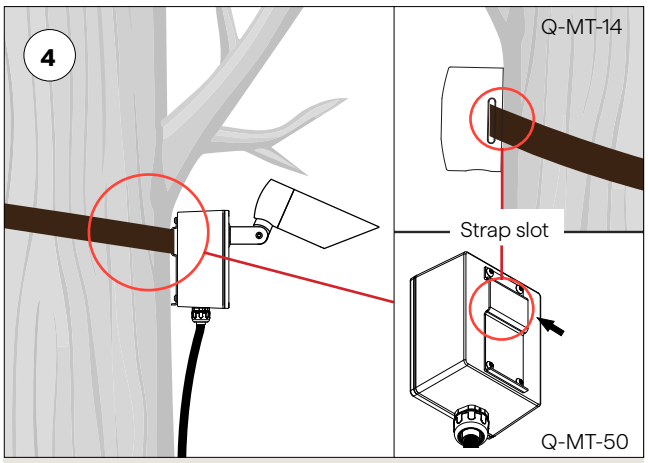

- Weave the tree strap through the slot on the back of the housing, wrap it around the tree, and tighten it with the ratchet until secure. **DO NOT OVERTIGHTEN** — overtightening can damage the tree.
- Installation complete.

© 2026 QTL. All rights reserved | 155 Hill St. Milford, CT 06460 | 203-367-8777 | sales@QTL.lighting | QTL.lighting

TREE MOUNT

Landscape Lighting Installation Instructions

MOUNTING METHOD: **TREE MOUNT - 120V DRIVER**
Q-MT-50

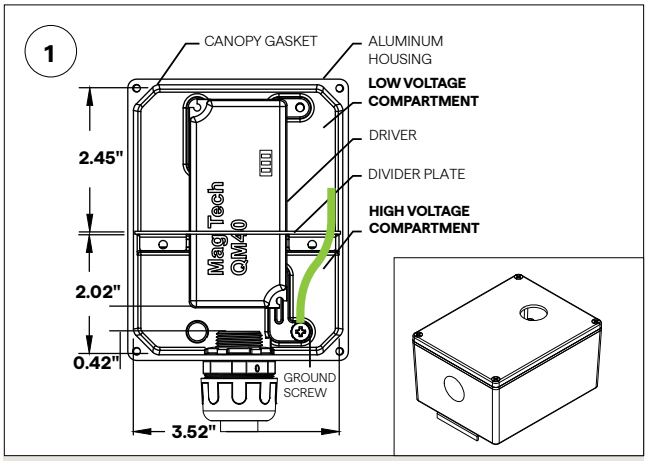

- Remove the four (4) canopy screws and lift off the canopy and gasket. The divider plate separates the HIGH-VOLTAGE (HV) and LOW-VOLTAGE (LV) compartments; the lower part of the 40W driver has the line-voltage wires. Bring the 120V cable into the HV compartment through the liquid-tight connector and splice the wires.
- See the luminaire wiring diagram for additional details.

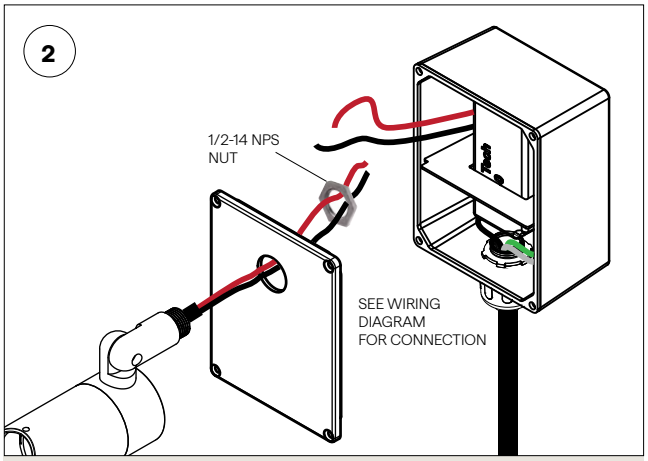

- Install the fixture on the canopy with the jam nut, rotating the fixture to the desired angle and tightening the nut.
- Use liquid-tight wire nuts to splice the fixture wires and driver wires together, following the wiring diagram in the luminaire instructions.
- Place the canopy over the box and tighten the screws.

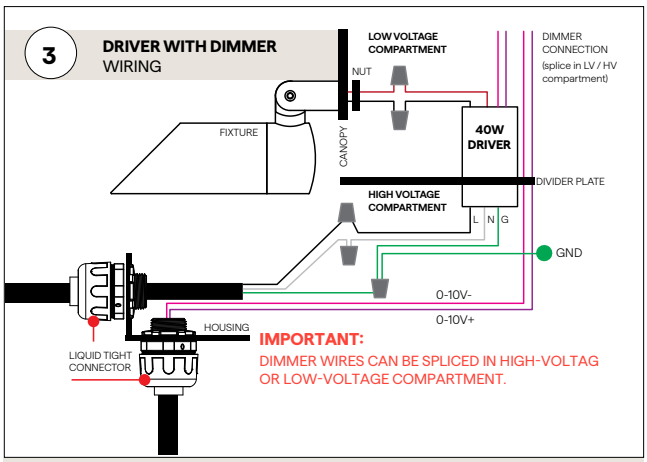

- Cut the fixture wire to length as needed and splice the fixture and power supply wires together with liquid-tight wire nuts (by others).

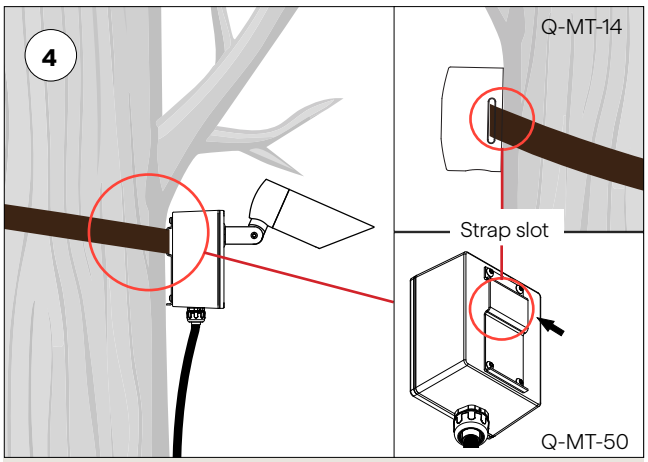

- Weave the tree strap through the slot on the back of the housing, wrap it around the tree, and tighten it with the ratchet until secure. **DO NOT OVERTIGHTEN** — overtightening can damage the tree.
- Installation complete.

© 2026 QTL. All rights reserved | 155 Hill St. Milford, CT 06460 | 203-367-8777 | sales@QTL.lighting | QTL.lighting