Q-CAP BOXA™ RGBW

24VDC Flexible Fixtures

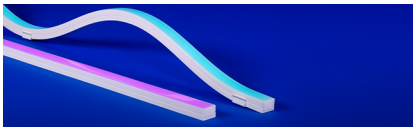

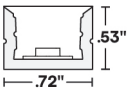

- Flexible encapsulated fixture with CLEAR encapsulation only
- Up/down bend
- 6" bend radius
- Interior and exterior rated (not including FC)
- Seven different mounting options
- Available in a seamless configuration for a continuous line of light
- Utilize clear endcaps for continuous runs
- Do not cut Non-Field Cuttable Q-CAP flexible fixtures
- IK10 impact rated

ORDERING PROCESS

(A) Specify Non-Field Cuttable Q-CAP

(B) (Optional) Specify field cuttable 4' piece - used to adjust total run length in the field (dry applications only)

A. NON-FIELD CUTTABLE Q-CAP

INFORMATION REQUIRED FOR LIGHTING SCHEDULE

A1	A2	A3	A4	A5	A6
PRODUCT	MOUNTING	RATED	CCT	WATTAGE	LENS
BOXA-RGBW				6.0	ENC/CL

ADDITIONAL INFORMATION REQUIRED TO ORDER

A7	A8	A9	A10	A11	A12
WIRE INPUT/ OUTPUT	CONNECTOR/ WIRE IN	CONNECTOR/ WIRE OUT	END CAPS	LENGTH (IN)	EXACT/ OPTIMAL

Sample Part Number: **BOXA-RGBW-PPS-2-DRY-RGBW-30-6.0-ENC/CL-P1-BW-BW-N/A-48"-E**

A1 PRODUCT

BOXA-RGBW

See last page for compatible power supplies.

A2 MOUNTING

RLC	Rigid Lock Channel
MC	Magnetic Clip
SGC	Side Graze Channel
PPS-2	PVC Clip
PPS-96	PVC Channel
PPS-LP-2	PVC Low Profile Clip
PPS-LP-96	PVC Low Profile Channel
WSC	White Snug Clip
BN-UD-SST-16'	16' BENDIT Up/Down Stainless Steel Channel
BN-UD-SST-32'	32' BENDIT Up/Down Stainless Steel Channel
BN-UD-WH-16'	16' BENDIT Up/Down White Stainless Channel
BN-UD-WH-32'	32' BENDIT Up/Down White Stainless Channel

White snug clip only for indirect cove use, not intended for hanging fixtures upside down.

PPS mounting clip recommended for seamless applications

A3 RATED

DRY	IP20
WET	IP67

A4 CCT

RGBW-27	RGBW-2700K
RGBW-30	RGBW-3000K

A5 WATTAGE

6.0	6.0W-SO

SO: Standard Output

A6 LENS

ENC/CL	Encapsulated in Clear

For representation of LED visibility, see Diode Visibility section on following pages

A7 WIRE INPUT/OUTPUT

SINGLE (Input only)

S1	End Feed
S2	Bottom Feed
S3	Left Side Feed
S4	Right Side Feed
S5	Seamless Feed

PASS THROUGH (Input/Output)

P1	End Feed
P2	Bottom Feed
P3	Left Side Feed
P4	Right Side Feed
P5	Seamless Feed

A8 CONNECTOR/WIRE IN

BW	Bare Wire (Standard 24")
CON6	Connector 6"
CON24	Connector 24"

BW: Standard length is 24", Max length is 120". Request custom length by writing in part number next to BW (example: BW48)

BW	Bare Wire (Standard 24")
CON6	Connector 6"
CON24	Connector 24"

BW: Standard length is 24", Max length is 120". Request custom length by writing in part number next to BW (example: BW48)

A9 CONNECTOR/WIRE OUT

N/A	Closed End (No feed)

BW	Bare Wire (Standard 24")
CON6	Connector 6"
CON24	Connector 24"

BW: Standard length is 24", Max length is 120". Request custom length by writing in part number next to BW (example: BW48)

A10 END CAPS

Single

CL	Clear
WH	White

Pass Through

N/A	Not Applicable

A11 LENGTH (IN)

Minimum length is 12", maximum length is 191" not including end caps. Contact us for lengths under 12".
Available in 4" increments.

A12 EXACT/OPTIMAL

O	Optimal Illumination
E	Exact Specified Length

Exact fixtures are the exact length specified +0 -1/8". Optimal fixtures' length is rounded down with illumination end to end. See Exact/Optimal Fixture Length charts.

5 year warranty | Up/Down Bend | Data subject to change, all data has +/- 5% tolerance | Ambient or mounting surface must not be lower than -4°F or higher than 125°F | Patent # D872,931 S, D847,395 S, 10,619,828 B2 | Only FC fixtures are Field-Cuttable per installation instructions | Field Cuttable is not returnable or refundable after it has been cut

© 2026 QTL. All rights reserved | 155 Hill St. Milford, CT 06460 | 203-367-8777 | sales@QTL.lighting | www.QTL.lighting

Specification subject to change. Rev-11-24-26

Q-CAP BOXA™ RGBW

24VDC Flexible Fixtures

B. FIELD CUTTABLE Q-CAP

INFORMATION REQUIRED FOR LIGHTING SCHEDULE

B1	B2	B3	B4	B5	B6
PRODUCT	MOUNTING	RATED	CCT	WATTAGE	LENS
BOXA-FC-RGBW		DRY		6.0	ENC/CL

ADDITIONAL INFORMATION REQUIRED TO ORDER

B7	B8	B9	B10	B11	B12
WIRE INPUT/ OUTPUT	CONNECTOR/ WIRE IN	CONNECTOR/ WIRE OUT	END CAPS	LENGTH (IN)	EXACT/ OPTIMAL
		N/A	CL	48”	N/A

Sample Part Number: **BOXA-FC-RGBW-PPS-2-DRY-RGBW-30-6.0-ENC/CL-S1-BW-N/A-CL-48"-N/A**

B1 PRODUCT

BOXA-FC-RGBW

See last page for compatible power supplies.

B2 MOUNTING

RLC	Rigid Lock Channel
MC	Magnetic Clip
SGC	Side Graze Channel
PPS-2	PVC Clip
PPS-96	PVC Channel
PPS-LP-2	PVC Low Profile Clip
PPS-LP-96	PVC Low Profile Channel
WSC	White Snug Clip
BN-UD-SST-16’	16’ BENDIT Up/Down Stainless Steel Channel
BN-UD-SST-32’	32’ BENDIT Up/Down Stainless Steel Channel
BN-UD-WH-16’	16’ BENDIT Up/Down White Stainless Channel
BN-UD-WH-32’	32’ BENDIT Up/Down White Stainless Channel

White snug clip only for indirect cove use, not intended for hanging fixtures upside down.

PPS mounting clip recommended for seamless applications

B3 RATED

DRY IP20

B4 CCT

RGBW-27 RGBW-2700K
RGBW-30 RGBW-3000K

B5 WATTAGE

6.0 6.0W-SO

SO: Standard Output

B6 LENS

ENC/CL Encapsulated in Clear

For representation of LED visibility, see Diode Visibility section on following pages

B7 WIRE INPUT/OUTPUT

SINGLE (Input only)
S1 End Feed
S2 Bottom Feed
S3 Left Side Feed
S4 Right Side Feed
S5 Seamless Feed

B8 CONNECTOR/WIRE IN

BW Bare Wire (Standard 24")
CON6 Connector 6"
CON24 Connector 24"

BW: Standard length is 24", Max length is 120". Request custom length by writing in part number next to BW (example: BW48)

B9 CONNECTOR/WIRE OUT

N/A Closed End (No feed)

B10 END CAPS

CL Clear

Due to cutting, white endcaps are not available.

Single

B11 LENGTH (IN)

48” Nominal

Starting Run length is 48.475" for S1, S5 and 48.725" for S2, S3, S4
Each cut point subtracts from the Starting Run Length
6.0 has a 4" cut point
S2, S3, & S4 can be cut down to as little as 4.725"
S1 can be cut down to as little as 4.475"
S5 can be cut down to as little as 6.475"

B12 EXACT/OPTIMAL

N/A

© 2026 QTL. All rights reserved | 155 Hill St. Milford, CT 06460 | 203-367-8777 | sales@QTL.lighting | www.QTL.lighting

Q-CAP BOXA™ RGBW

24VDC Flexible Fixtures

1 PRODUCT - DIMENSIONS

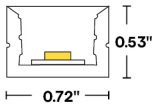

Profile
(Standard)

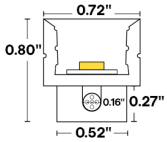

Profile
(Seamless bare wire)

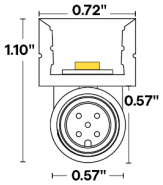

Profile
(CON6-24 barrel)

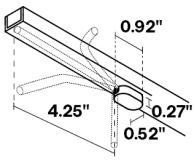

Seamless Omnidirectional
wireways (S5, P5)

Shown with bare wire
connectors vary

BEND RADIUS

Up/Down Bend

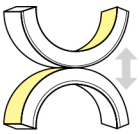

6" bending radius

FLEXIBILITY

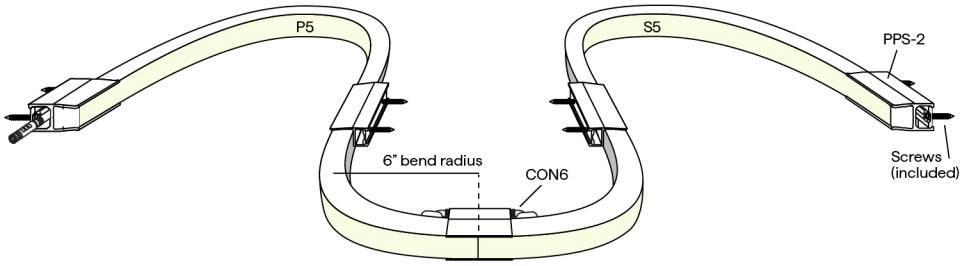

2 MOUNTING

WSC

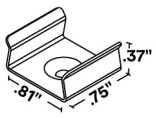

White Snug Clip
Indirect uplight

To order separately use WSC

Each clip comes with a #6x5/8" flat screw

RLC

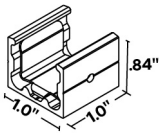

Rigid Lock Channel

To order separately use RLC

Each clip comes with a #6x5/8" flat screw

MC

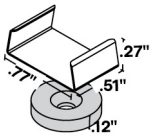

Magnetic Clip
Cove use only

To order separately use MC

Each clip comes with a #6x5/8" flat screw

SGC

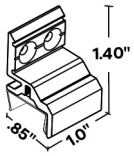

Side Graze Channel

To order separately use SGC

Each clip comes with a #6x5/8" flat screw

PPS-2

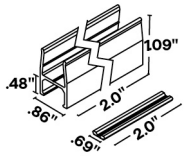

PVC Mounting Clip

To order separately use BOXA-PPS-2

PPS kit quantity: **(2 kits per ft) + 1.**
For example: 1 ft = (2 × 1) + 1 = 3 PPS kits provided.

© 2026 QTL. All rights reserved | 155 Hill St. Milford, CT 06460 | 203-367-8777 | sales@QTL.lighting | www.QTL.lighting

Specification subject to change. Rev-11-24-26

Q-CAP BOXA™ RGBW

24VDC Flexible Fixtures

MOUNTING CONTINUED

PPS-96

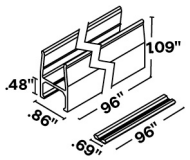

96" straight linear run

To order separately use BOXA-PPS-96

PPS kit quantity: **(2 kits per ft) + 1.** For example: 1 ft = (2 × 1) + 1 = 3 PPS kits provided.

Each clip comes with a #8" flat screw

PPS-LP-2

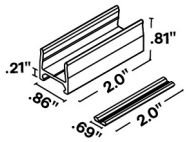

Low profile PVC Mounting Clip

To order separately use BOXA-PPS-LP-2

PPS kit quantity: **(2 kits per ft) + 1.** For example: 1 ft = (2 × 1) + 1 = 3 PPS kits provided.

PPS-LP-96

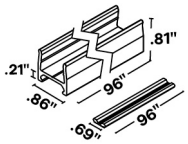

Low profile PVC channel 96" straight linear run

To order separately use BOXA-PPS-LP-96

PPS kit quantity: **(2 kits per ft) + 1.** For example: 1 ft = (2 × 1) + 1 = 3 PPS kits provided.

Each clip comes with a #8" flat screw

BN-UD

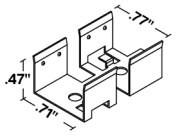

BENDIT Channel
Vertical Stainless Steel
Flexible Channel

Continuous mounting solution for flexible fixtures, 16' or 32' field cuttable lengths

To order separately use either STND-QCAP-BN-UD-SST-16', STND-QCAP-BN-UD-SST-32', STND-QCAP-BN-UD-WH-16', or STND-QCAP-BN-UD-WH-32'

64 #4-40 1/2" screws provided per 16'

4/5 DELIVERED LUMENS

[Calculated L70 = 40000 hrs]
Tested with BOXA-RGBW-**...-DRY

6.0 W/FT Total Load			
	ENC/CL		Circuit
	LM	Wavelength	Wattage
Red	39	632	1.3
Green	119	514	1.5
Blue	33	466	1.5

CCT	ENC/CL					Circuit
	LM	CRI Ra	CRI R9	TM30 Rf	TM30 Rg	Wattage
2700K	109	94	68	87	106	1.7
3000K	**	**	**	**	**	1.7

6 DIODE VISIBILITY

ENC/CL - Clear encapsulation

BUG RATING

WATTAGE	B	U	G
6.0 (ALL CCTs & COLORS)	B0	U1	G0

TEMPERATURE RATINGS

	6.0 W/FT	
	Min	Max
Ambient Operating Temp - Surface	-4°F	95°F
Storage Temp	-4°F	140°F
Installation Temp	50°F	100°F

7 WIRE INPUT/OUTPUT

SINGLE (Input only)

S1

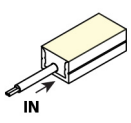

End Feed

S2

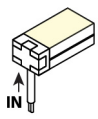

Bottom Feed

S3

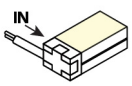

Side Feed - Left

S4

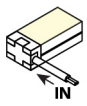

Side Feed - Right

PASS THROUGH (Input/Output) - Only applicable for Non-Field Cuttable Q-CAP

P1

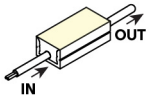

End Feed

P2

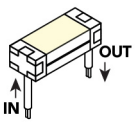

Bottom Feed

P3

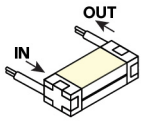

Side Feed - Left

P4

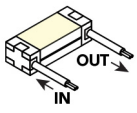

Side Feed - Right

© 2026 QTL. All rights reserved | 155 Hill St. Milford, CT 06460 | 203-367-8777 | sales@QTL.lighting | www.QTL.lighting

Specification subject to change. Rev-11-24-26

Q-CAP BOXA™ RGBW

24VDC Flexible Fixtures

SEAMLESS SINGLE (Input only)

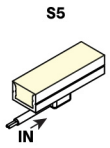

Seamless Feed

SEAMLESS PASS THROUGH (Input/Output) - Only applicable for Non-Field Cuttable Q-CAP

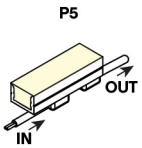

Seamless Feed

CONFIGURATION OPTIONS

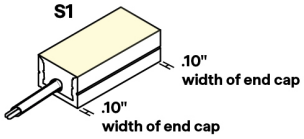

Single End Feed

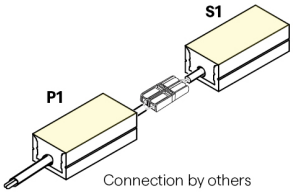

Connection by others

Non-Continuous End Feed

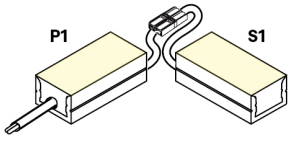

Connection by others

Non-Continuous Corner Feed

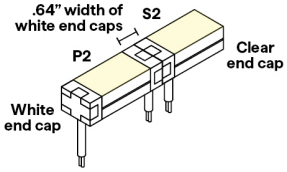

Continuous Bottom Feed

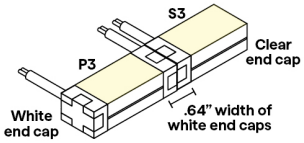

Continuous Side Feed - Left

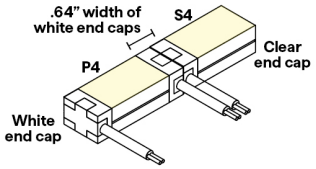

Continuous Side Feed - Right

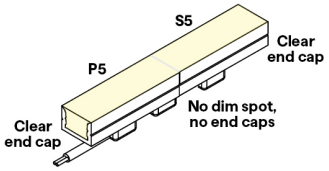

Seamless Bottom Feed

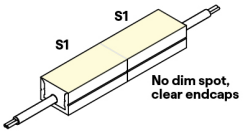

Continuous End to End Feed

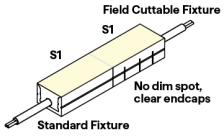

Field Cuttable - Continuous End to End Feed

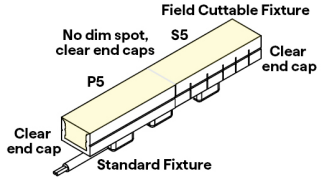

Field Cuttable - Seamless Bottom Feed

FIELD CUTTABLE MARKING

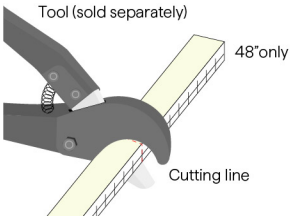

Field cuttable fixtures are sold in 4' increments and go at the end of a run, allowing for easy field adjustment



Note: Only FC fixtures are field cuttable — Do not attempt to cut non FC fixtures.
Cut only on the marked cut lines. Only cut from non-feed end. Do not attempt to cut while power is on.

© 2026 QTL. All rights reserved | 155 Hill St. Milford, CT 06460 | 203-367-8777 | sales@QTL.lighting | www.QTL.lighting

Q-CAP BOXA™ RGBW

24VDC Flexible Fixtures

8/9 CONNECTOR/WIRE – IN/OUT

Connector/Wire In or Out not needed to specify product. Typical selection is S1 for Wire Input/Output, BW for Connector/Wire In, N/A for Connector/Wire Out, and WH for End Caps

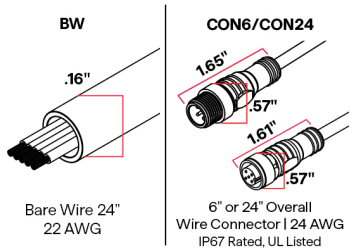

Bare Wire 24"
22 AWG

6" or 24" Overall
Wire Connector | 24 AWG
IP67 Rated, UL Listed

10 END CAPS (NO FEED)

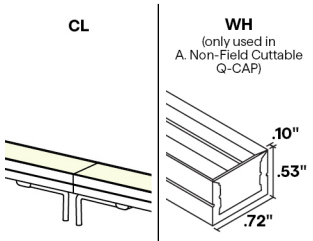

Clear endcaps
.0" added at end

.00" dim spot

White endcaps
.0" added at end

.10" dim spot

END CAPS (WITH FEED)

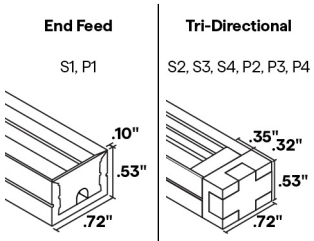

White endcaps
.0" added at end

.10" dim spot

White endcaps
.32" added at end

.67" dim spot

11 LENGTH - WIRING DETAIL

6.0W | Available in 4" increments 12"-191"



12 EXACT/OPTIMAL FIXTURE LENGTH

E/O Length Calculator → E/O Explained →

Exact fixtures are the exact length specified +0 -1/8". Optimal fixtures' length is rounded down based on LED cut points to allow the fixture to be illuminated end to end. For runs with multiple fixtures that need to fill a specific length, it's recommended to order all optimal fixtures with an exact fixture at the end of the run.

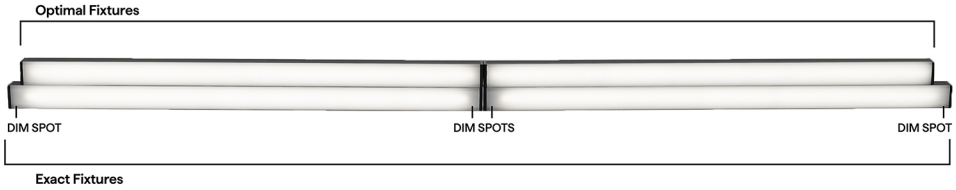

© 2026 QTL. All rights reserved | 155 Hill St. Milford, CT 06460 | 203-367-8777 | sales@QTL.lighting | www.QTL.lighting

Q-CAP BOXA™ RGBW

24VDC Flexible Fixtures

RGBW ENC LENGTHS BY INCH

EXACT LENGTH

Requested Length	Potential dim spot on either end of a S1 fixture  End Feed
12"	2"
13"	0.5"
14"	1"
15"	1.5"
16"	2"
17"	0.5"
18"	1"
19"	1.5"
20"	2"
21"	0.5"
22"	1"
23"	1.5"
24"	2"
36"	2"
48"	2"
60"	2"
72"	2"
84"	2"
96"	2"

OPTIMAL LENGTH

Requested Nominal Length	S1  End Feed	S2 & S3 & S4 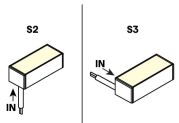 Bottom Feed / Side Feed - Left / Side Feed - Right	P1 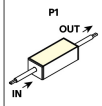 End Feed	P2 & P3 & P4 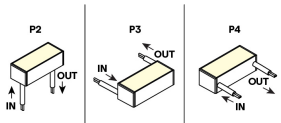 Bottom Feed / Side Feed - Left / Side Feed - Right	S5 & P5 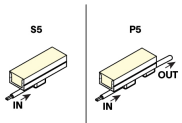 Seamless Feed / Seamless Feed
12"	8.68"	8.98"	8.95"	9.75"	8.20"
13"	12.68"	12.98"	12.95"	9.75"	12.20"
14"	12.68"	12.98"	12.95"	13.75"	12.20"
15"	12.68"	12.98"	12.95"	13.75"	12.20"
16"	12.68"	12.98"	12.95"	13.75"	12.20"
17"	16.68"	16.98"	16.95"	13.75"	16.20"
18"	16.68"	16.98"	16.95"	17.75"	16.20"
19"	16.68"	16.98"	16.95"	17.75"	16.20"
20"	16.68"	16.98"	16.95"	17.75"	16.20"
21"	20.68"	20.98"	20.95"	17.75"	20.20"
22"	20.68"	20.98"	20.95"	21.75"	20.20"
23"	20.68"	20.98"	20.95"	21.75"	20.20"
24"	20.68"	20.98"	20.95"	21.75"	20.20"
36"	32.68"	32.98"	32.95"	33.75"	32.20"
48"	44.68"	44.98"	44.95"	45.75"	44.20"
60"	56.68"	56.98"	56.95"	57.75"	56.20"
72"	68.68"	68.98"	68.95"	69.75"	68.20"
84"	80.68"	80.98"	80.95"	81.75"	80.20"
96"	92.68"	92.98"	92.95"	93.75"	92.20"

COMPATIBLE POWER SUPPLIES

See power supplies cut sheets for more information. Data subject to change, all data has +/- 5% tolerance.

DIM TO LEVEL	INDOOR	OUTDOOR
	RGBW, RGBW-HE	RGBW, RGBW-HE
0.1%	QT-CAB-eLED+DALI-DT8 QT-CAB-eLED+DMX QTM-eLED+DALI-DT8 QTM-eLED+DMX QZ-DMX	Q-SET-QZ-DMX QOM-eLED+DALI-DT8 QOM-eLED+DALI-DT8-PS QOM-eLED+DMX QZ-DMX
1%	QZ-DALI-DT8	Q-SET+QZ-DALI-DT8 QZ-DALI-DT8
10%	Non-Dim Power Supply with RGBW App Dongle	

DIMMING PROTOCOL	INDOOR	OUTDOOR
	RGBW, RGBW-HE	RGBW, RGBW-HE
DMX	QTM-eLED+DMX QZ-DMX	Q-SET-QZ-DMX QOM-eLED+DMX QZ-DMX
DALI-2: DT8	QT-CAB-eLED+DALI-DT8 QTM-eLED+DALI-DT8 QZ-DALI-DT8	Q-SET+QZ-DALI-DT8 QOM-eLED+DALI-DT8 QZ-DALI-DT8
SCENE App Dimmed	Non-Dim Power Supply with RGBW App Dongle	

© 2026 QTL. All rights reserved | 155 Hill St. Milford, CT 06460 | 203-367-8777 | sales@QTL.lighting | www.QTL.lighting

Q-CAP BOXA™ RGBW

24VDC Flexible Fixtures

COMPATIBLE MOUNTING ACCESSORIES

Q-ANGLE



Adjustable mounting accessory

NJ-LARGE



J Mounting Bracket

NU-LARGE



U Mounting Bracket

SD-J-LARGE



J Mounting Bracket

BL-LARGE

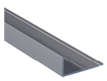

Backwards L Mounting Bracket

NL-LARGE



L Mounting Bracket

SD-L-LARGE



L Mounting Bracket

iQ-QCAP-UNV-CUTTER



QTL recommended FC Cutter

COMPATIBLE WIRING ACCESSORIES

Q-mini-J5

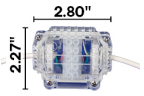

UL Listed, miniature junction box, DRY/DMP (WET rated with silicone)

COMPATIBLE CONTROL ACCESSORIES

SCENE APP DONGLE



Wi-Fi or Bluetooth Connectivity

COMPATIBLE APPS

NFC APP



Read and write DMX addresses and adjust voltage

© 2026 QTL. All rights reserved | 155 Hill St. Milford, CT 06460 | 203-367-8777 | sales@QTL.lighting | www.QTL.lighting

BOXA

Q-CAP HANDLING INSTRUCTIONS

WARNING: FRAGILE

Flexible fixtures contain sensitive electronics, requiring careful handling and installation to preserve their warranty. When unpacking flexible fixtures, handle them gently and test all fixtures upon receiving.

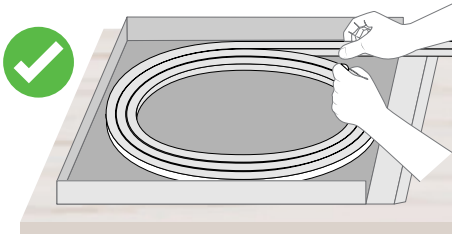

Keep the fixtures flat and supported when removing them from the box. Unroll them carefully on a flat surface and do not bend them against the intended bend direction.

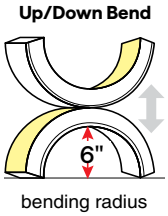

This BOXA fixture can only be up and down bent. Do not bend the fixture more than a 6" radius.

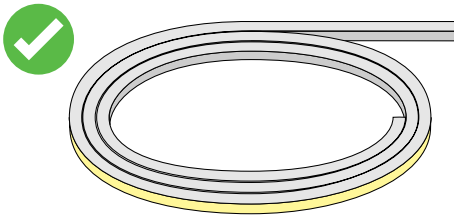

Powering the fixtures prior to installing will warm them up and make them more flexible, preventing damage.

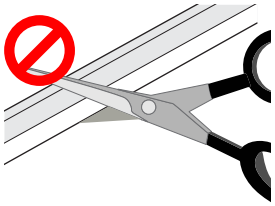

Only FC fixtures are field cuttable. Do not attempt to cut non-FC fixtures. Field modifications void warranty.

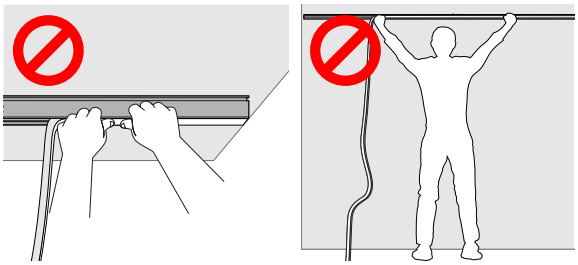

Do not let any portion of the fixture hang in any direction during installation. Use two people to install to ensure the fixture does not hang.

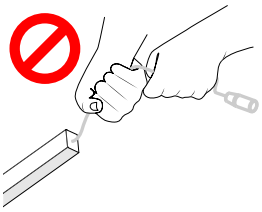

Do not grab or pull by the wire feeds.

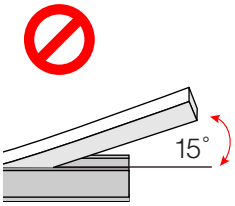

Do not bend the fixture more than 15 degrees when installing into mounting brackets or channels.

MISHANDLING OF FIXTURES DURING INSTALLATION VOIDS WARRANTY

TEMPERATURE RATINGS

Static White & Static White HE	1.5 W/FT		1.5HE W/FT		3.0 W/FT		3.0HE W/FT		5.0 W/FT		6.0HE W/FT	
	Min	Max	Min	Max	Min	Max	Min	Max	Min	Max	Min	Max
Ambient Operating Temp - Surface	-4°F	130°F	-4°F	140°F	-4°F	125°F	-4°F	125°F	-4°F	105°F	-4°F	95°F
Storage Temp	-4°F	140°F	-4°F	140°F	-4°F	140°F	-4°F	140°F	-4°F	140°F	-4°F	140°F
Installation Temp	50°F	100°F	50°F	100°F	50°F	100°F	50°F	100°F	50°F	100°F	50°F	100°F

Static Color	5.0 W/FT	
	Min	Max
Ambient Operating Temp - Surface	-4°F	105°F
Storage Temp	-4°F	120°F
Installation Temp	50°F	100°F

Tunable & Warm Dim	DW 1.5HE W/FT		DW 2.5HE W/FT	
	Min	Max	Min	Max
Ambient Operating Temp - Surface	-4°F	140°F	-4°F	125°F
Storage Temp	-4°F	120°F	-4°F	120°F
Installation Temp	50°F	100°F	50°F	100°F

RGB	6.0 W/FT	
	Min	Max
Ambient Operating Temp - Surface	-14°F	90°F
Storage Temp	-13°F	176°F
Installation Temp	50°F	100°F

RGBW & RGBW-HE	6.0 W/FT		4.0HE W/FT	
	Min	Max	Min	Max
Ambient Operating Temp - Surface	-4°F	95°F	-4°F	110°F
Storage Temp	-4°F	140°F	-4°F	176°F
Installation Temp	50°F	100°F	50°F	100°F

© 2024 QTL. All rights reserved | 155 Hill St. Milford, CT 06460 | 203-367-8777 | sales@QTL.lighting | QTL.lighting

BOXA

Q-CAP Installation Instructions

ATTENTION: Please read all instructions BEFORE installation

- Product to be installed by a licensed electrician - Field modifications void warranty
- Use only with Class 2 power supply unit — Warranty only valid with QTL power supplies
- Surface mount or recessed in millwork
- Not rated for walkover
- Input Voltage: 24VDC
- Diagrams for representation only and not to scale.

METHODS OF INSTALLATION

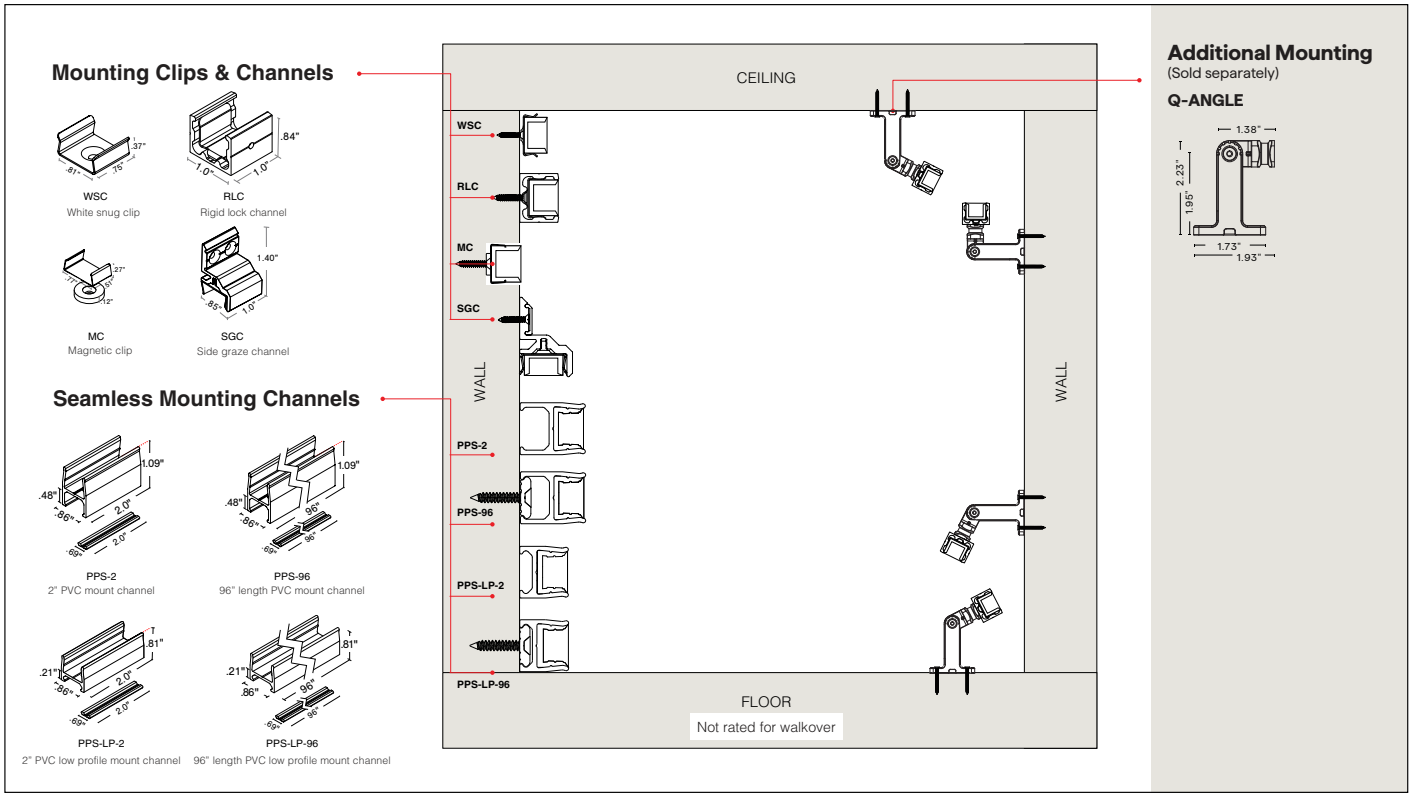

Mounting Method

- WSC (page 7)
- RLC (page 8)
- SGC (page 9)
- BN-UD (page 10)
- MC (page 11)
- PPS-2 (page 12)
- PPS-LP-2 (page 13)
- PPS-96 (page 14)
- PPS-LP-96 (page 15)

© 2026 QTL. All rights reserved | 155 Hill St. Milford, CT 06460 | 203-367-8777 | sales@QTL.lighting | QTL.lighting

BOXA

Q-CAP Installation Instructions

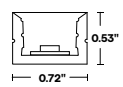

BOXA Profile

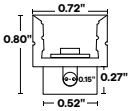

BOXA Profile (Seamless BW - DRY/WET)

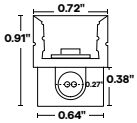

BOXA Profile (Seamless BW - SBM)

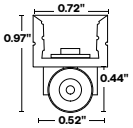

BOXA Profile (Seamless BRL)

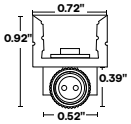

BOXA Profile (Seamless CON24 SW, SW-HE, SC)

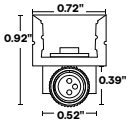

BOXA Profile (Seamless CON24 DW-HE)

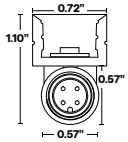

BOXA Profile (Seamless CON24 RGB)

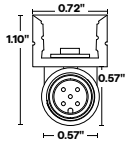

BOXA Profile (Seamless CON24 RGBW)

COMPONENTS & HARDWARE

Alternate screw lengths can be used in installation as long as the screw diameter size is consistent with the included screw diameter size

MOUNTING CLIP & MOUNTING CHANNEL

WSC

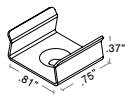

White snug clip

Included
- #6 Flat Screw (one provided for each clip)

- White snug clip included with side graze channel
- 2 white snug clips provided per first 12", 1 for each additional 12".Other mounting styles incur additional charge, see price guide for details

RLC

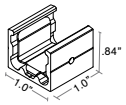

Rigid lock channel

Included
- #6 Flat Screw (one provided for each clip)
- 5/64 Allen key
- #8-32 Set Screw

MC

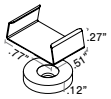

Magnetic clip (Cove use only)

Included
- #6 Flat Screw (one provided for each clip)

SGC

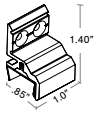

Side graze channel

Included
- #6 Flat Screw (one provided for each clip)

SEAMLESS MOUNTING CLIP & SEAMLESS MOUNTING CHANNEL

PPS-2

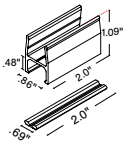

PVC mounting clip

Included
- #8 flat head screw (one provided for each clip)
- Built in wireway

- Join two fixtures together
- PPS-2 kit quantity: **(2 kits per ft) + 1**. For example: 1 ft = (2 × 1) + 1 = 3 PPS-2 kits provided.

PPS-96

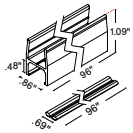

PVC channel

Included
- #8 flat head screw (1 screw for every 16")
- Built in wireway

- Support the fixtures
- PPS-96 kit quantity: **(2 kits per ft) + 1**. For example: 1 ft = (2 × 1) + 1 = 3 PPS-96 kits provided.

PPS-LP-2

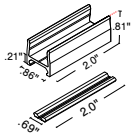

Low profile PVC mounting clip

Included
- #8 flat head screw (one provided for each clip)
- No wireway

- Join two fixtures together
- PPS-LP-2 kit quantity: **(2 kits per ft) + 1**. For example: 1 ft = (2 × 1) + 1 = 3 PPS-LP-2 kits provided.

PPS-LP-96

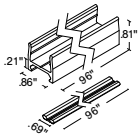

Low profile PVC channel

Included
- #8 flat head screw (1 screw for every 16")
- No wireway

- Support the fixtures
- PPS-LP-96 kit quantity: **(2 kits per ft) + 1**. For example: 1 ft = (2 × 1) + 1 = 3 PPS-LP-96 kits provided.

STND-QCAP-BN-UD

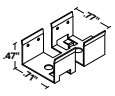

Vertical Flexible Channel

Included
- #4-40 1/2" screws (64 screws for every 16')

© 2026 QTL. All rights reserved | 155 Hill St. Milford, CT 06460 | 203-367-8777 | sales@QTL.lighting | QTL.lighting

BOXA

Q-CAP Installation Instructions

ACCESSORIES SOLD SEPARATELY
Q-ANGLE; sold in pairs

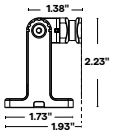

Q-ANGLE

Included
• 4 SS #6×1.25" Flat head wood screws
• 2 SS 4-40 Flat head clip screws
• 2 SS 6-32 Fillister screws

© 2026 QTL. All rights reserved | 155 Hill St. Milford, CT 06460 | 203-367-8777 | sales@QTL.lighting | QTL.lighting

CONFIGURATION OPTIONS

BOXA

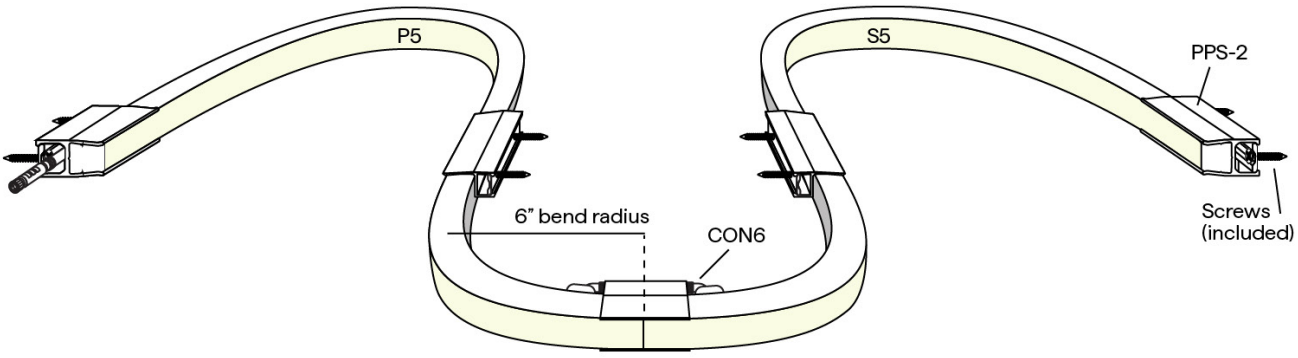

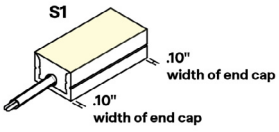

Single End Feed

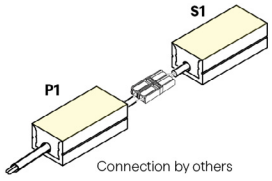

Non-Continuous End Feed

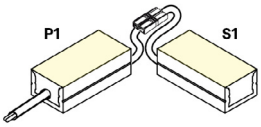

Non-Continuous Corner Feed

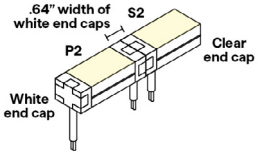

Continuous Bottom Feed

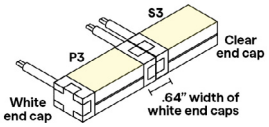

Continuous Side Feed - Left

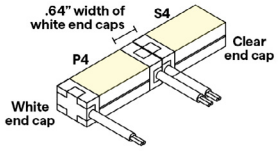

Continuous Side Feed - Right

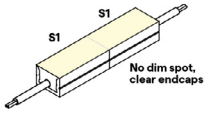

Continuous End to End Feed

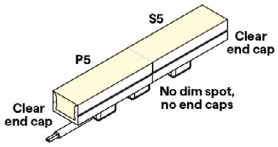

Seamless Bottom Feed

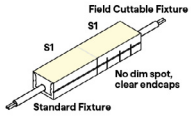

Field Cuttable - Continuous End to End Feed

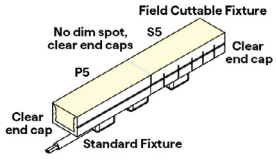

Field Cuttable - Seamless Bottom Feed

Review wire method to ensure clean installation prior to mounting finished fixture.

NOTE: Additional wire methods include:
S1, S2, S3, S4, S5: Connector/Wire Input only
P1, P2, P3, P4, P5: Connector/Wire Input and Output

© 2026 QTL. All rights reserved | 155 Hill St. Milford, CT 06460 | 203-367-8777 | sales@QTL.lighting | QTL.lighting

FIELD CUTTABLE

- Field cuttable fixtures are sold in 4' increments and go at the end of a run, allowing easy field adjustment
- Only FC fixtures are field cuttable - DO NOT CUT NON-FIELD CUTTABLE FIXTURES
- Do not attempt to cut while power is on

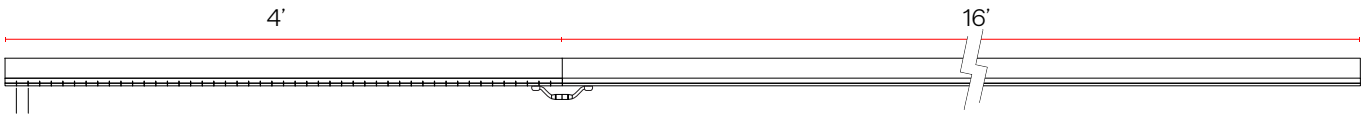

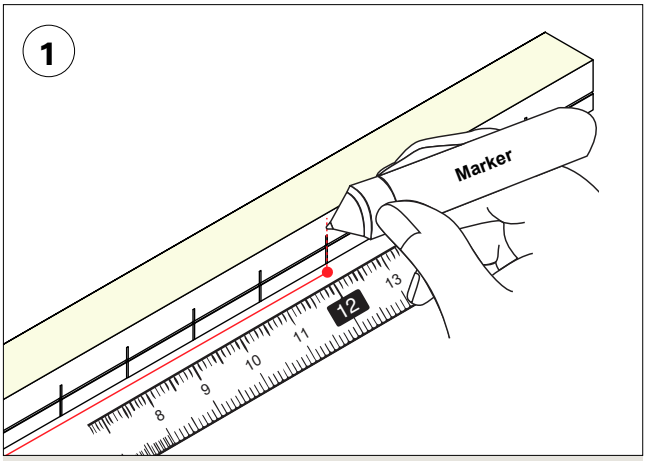

Mark desired length on field cuttable housing on the cut line.

NOTE: Only Cut on the marked cut lines. Only cut from non-feed end.

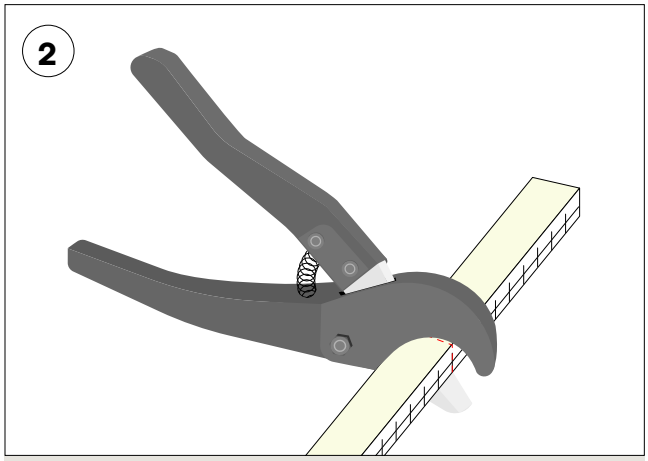

Cut with Q-CAP cutter tools (sold separately).

© 2026 QTL. All rights reserved | 155 Hill St. Milford, CT 06460 | 203-367-8777 | sales@QTL.lighting | QTL.lighting

SURFACE MOUNTING METHOD: **WHITE SNUG CLIP**

- 2 clips provided per first 12", 1 for each additional 12"

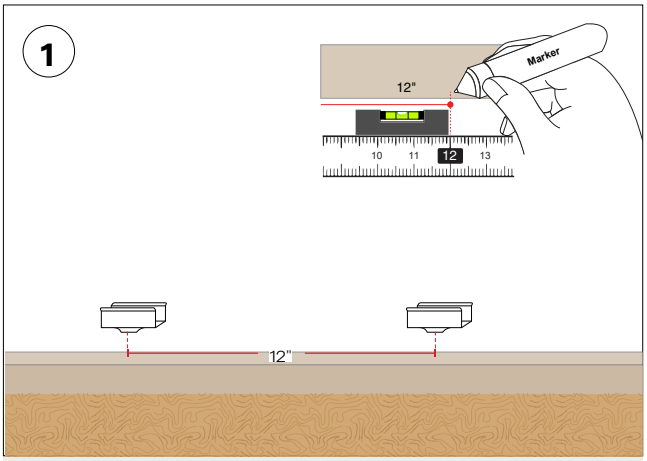

Determine the fixture(s) location and positioning on desired surface; evenly distribute clips. Make any necessary reference markings to indicate where each clip is to be secured in place. Recommended every 12".

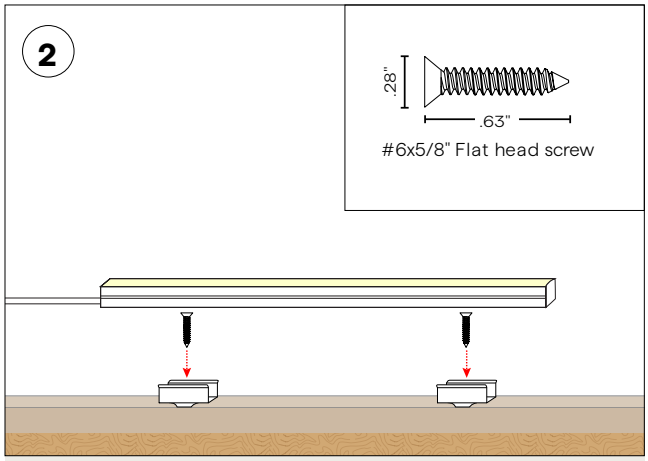

- Secure clips using the #6 flat head hardware provided
- Ensure the screw head is flush with the clip's base.

NOTE: Flat head screw type is dependent on surface/application material Alternative flat head screws may be required. Refer to the surface material manufacturer for suggested screw type.

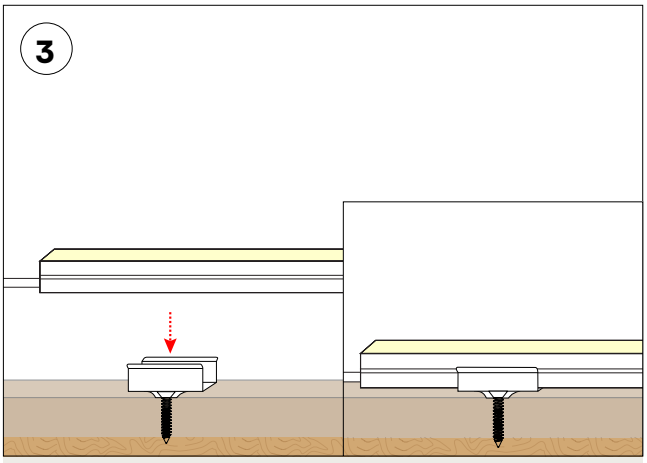

Snap fixture onto clips.

© 2026 QTL. All rights reserved | 155 Hill St. Milford, CT 06460 | 203-367-8777 | sales@QTL.lighting | QTL.lighting

SURFACE MOUNTING METHOD: **RIGID LOCK CHANNEL**

- 2 clips provided per first 12", 1 for each additional 12"

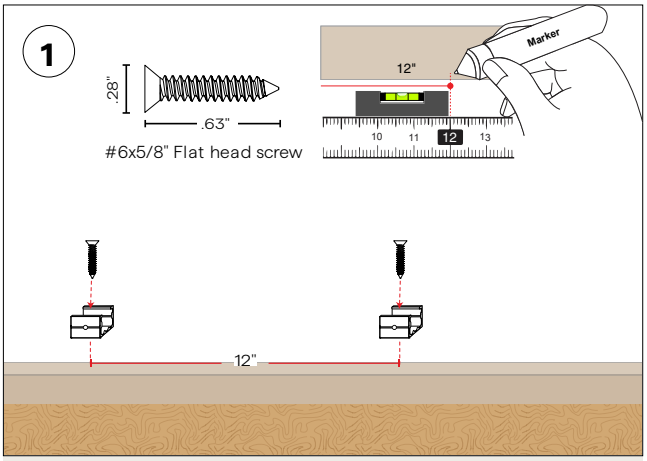

Determine the fixture(s) location and positioning on desired surface; evenly distribute clips. Make any necessary reference markings to indicate where each clip is to be secured in place. Recommended every 12".

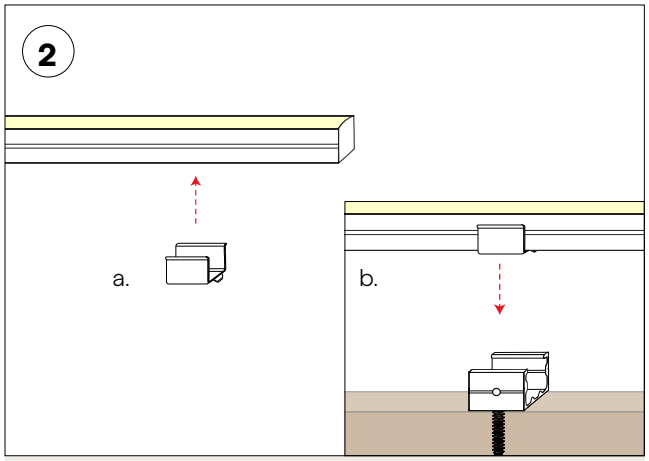

a. Push retainer clip onto fixture.

b. Push fixture with retainer clip into Rigid Lock Channel.

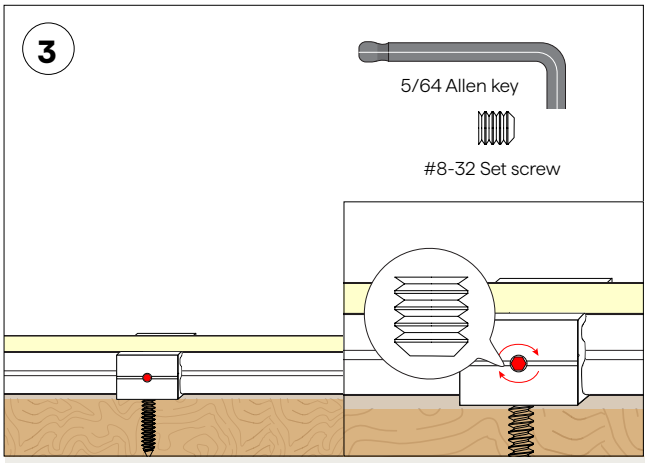

Tighten set screw to lock fixture in channel for extra security.

© 2026 QTL. All rights reserved | 155 Hill St. Milford, CT 06460 | 203-367-8777 | sales@QTL.lighting | QTL.lighting

SURFACE MOUNTING METHOD: **SIDE GRAZE CHANNEL**

- 2 clips provided per first 12", 1 for each additional 12"

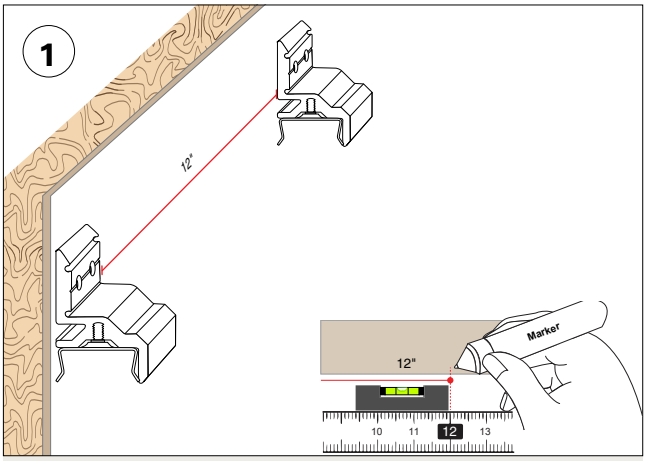

Determine the fixture(s) location and positioning on desired surface; evenly distribute clips. Make any necessary reference markings to indicate where each clip is to be secured in place. Recommended every 12".

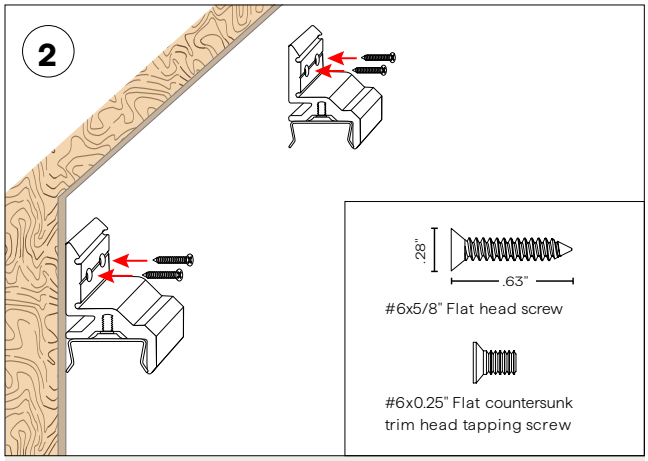

- Secure clips using the #6 flat head hardware provided
- Ensure the screw head is flush with the clip's base.

NOTE: Flat head screw type is dependent on surface/application material Alternative flat head screws may be required. Refer to the surface material manufacturer for suggested screw type.

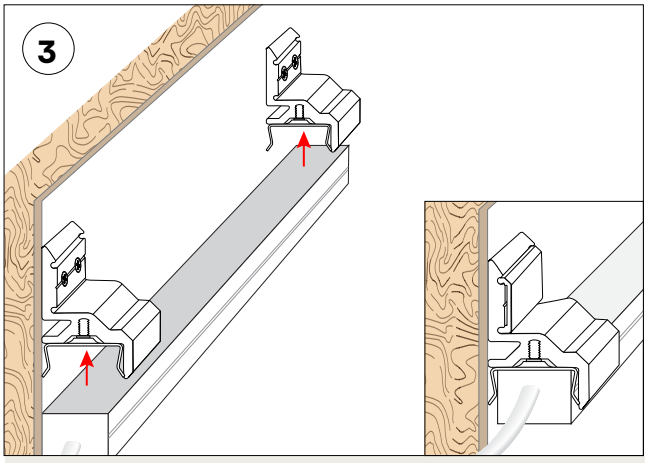

Snap fixture onto clips.

© 2026 QTL. All rights reserved | 155 Hill St. Milford, CT 06460 | 203-367-8777 | sales@QTL.lighting | QTL.lighting

BOXA

Q-CAP Installation Instructions

SURFACE MOUNTING METHOD: **BN-UD**

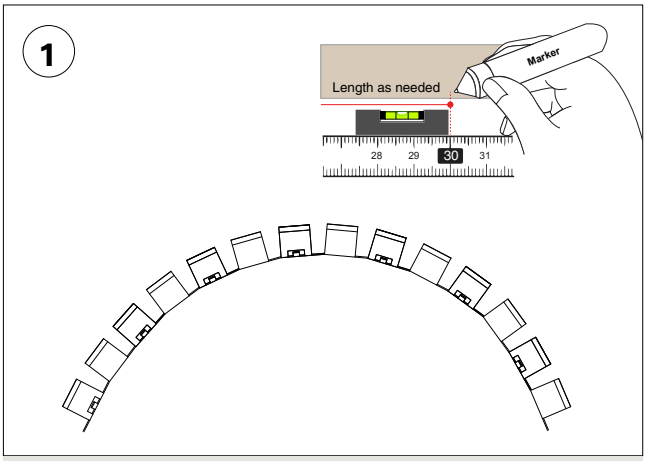

Determine the fixture(s) location and positioning on desired surface and arrange the BENDIT channel into the desired shape. Make any necessary reference markings to indicate where the channel is to be secured in place.

NOTE: The bend of the channel cannot exceed the bend of the fixture, Bending past the recommended amount can damage the fixture, Please see Q-CAP fixture bend radius chart or fixture cut sheet

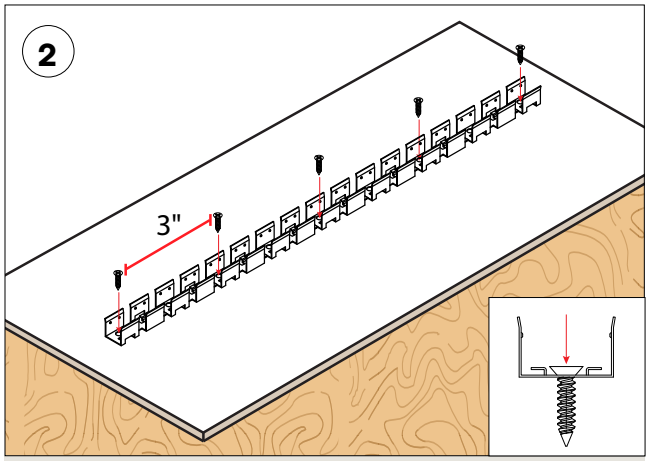

Use #4 tapping screws to make shape desired while not exceeding fixture bend radius. Recommended 1 screw approximately every 3”

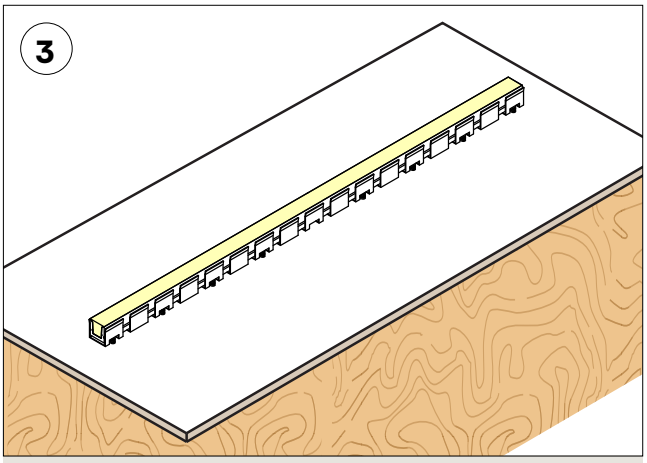

Press fit the fixture into the channel until secure.

Q-CAP Fixture Bend Radius			
Fixture	Vertical Bend	Horizontal Bend	Helical Bend
ANYBEND	9"	9"	-
BOXA	6"	-	-
KURV	-	6"	-
KURV-BK	-	10"	-
LUME	6"	-	-
NEXUS	4"	-	4"
WALA	-	6"	-
WAVE	6"	-	-
WURM	6"	-	6"
ZALA	-	6"	-

© 2026 QTL. All rights reserved | 155 Hill St. Milford, CT 06460 | 203-367-8777 | sales@QTL.lighting | QTL.lighting

RECESSED MOUNTING METHOD: **MAGNETIC CLIP**

- 2 clips provided per first 12", 1 for each additional 12"

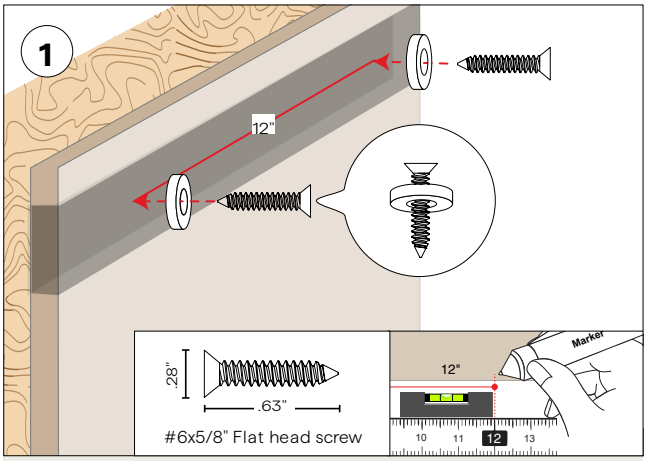

Determine the fixture(s) location and positioning on desired surface; evenly distribute clips. Make any necessary reference markings to indicate where each clip is to be secured in place. Recommended every 12".

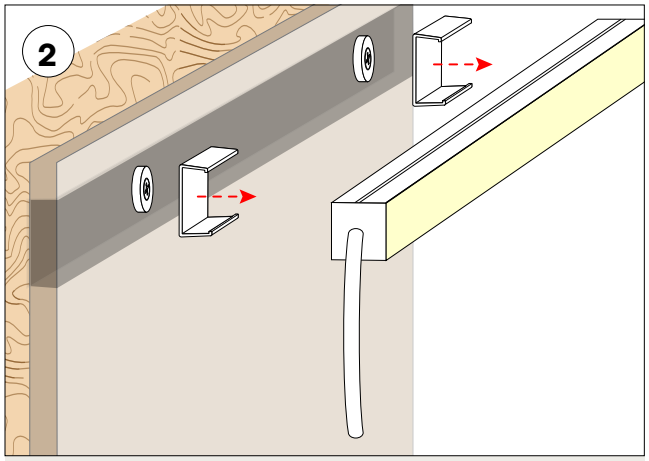

Attach clips to fixture matching magnet distances.

NOTE: Flat head screw type is dependent on surface/application material. Alternative flat head screws may be required. Refer to the surface material manufacturer for suggested screw type.

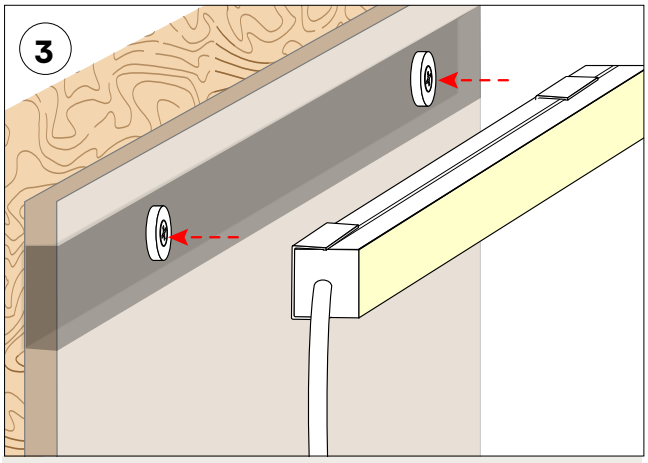

Align and snap fixture to magnetic rings.

© 2026 QTL. All rights reserved | 155 Hill St. Milford, CT 06460 | 203-367-8777 | sales@QTL.lighting | QTL.lighting

SEAMLESS MOUNTING METHOD: **PPS-2**

- Connects two seamless fixtures, with or without wire exit
- 2" PVC mount chanel
- Built in wireway

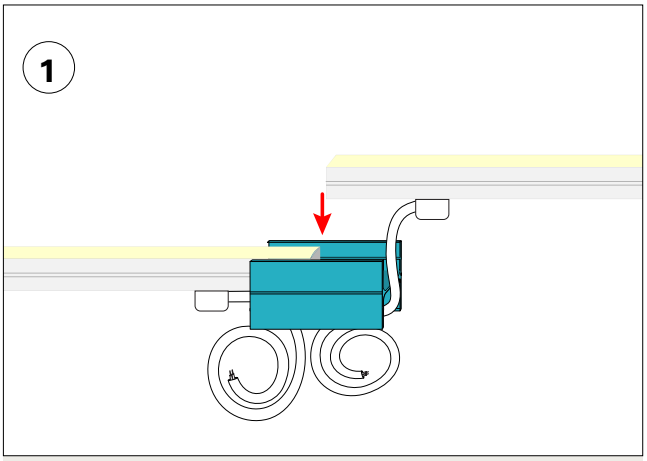

Press both fixtures into PPS clip.

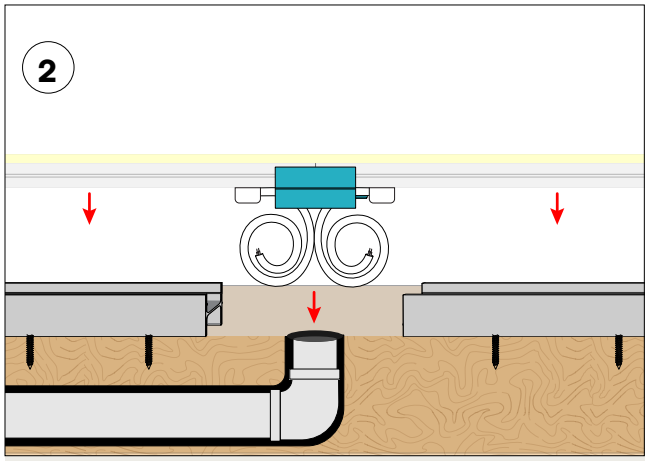

Snap fixture into mounted PPS channel. Align the wire exit with conduit and leave a space in the bracketing for the wire exits.

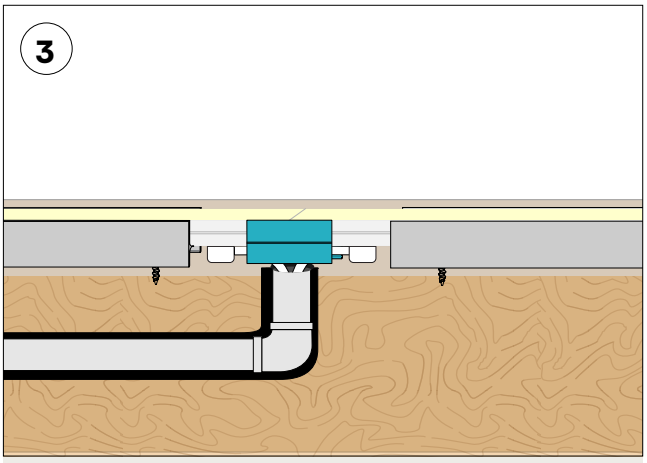

Finished assembly for seamless bottom feed mounting

© 2026 QTL. All rights reserved | 155 Hill St. Milford, CT 06460 | 203-367-8777 | sales@QTL.lighting | QTL.lighting

SEAMLESS MOUNTING METHOD: **PPS-LP-2**

- Connects two fixtures, with no wire exit
- 2" low profile PVC mount chanel

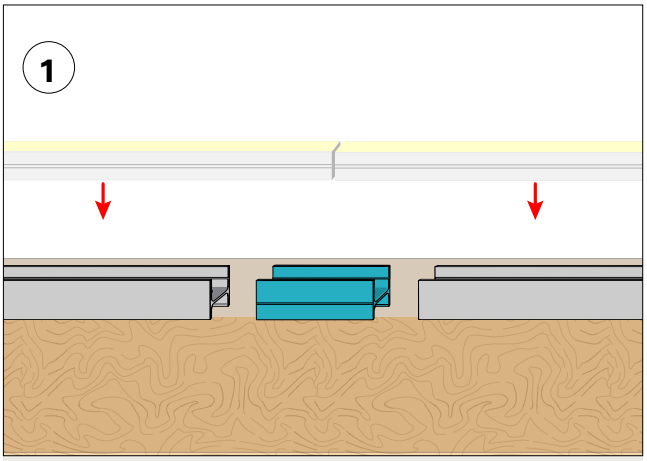

Snap in 2" channel.

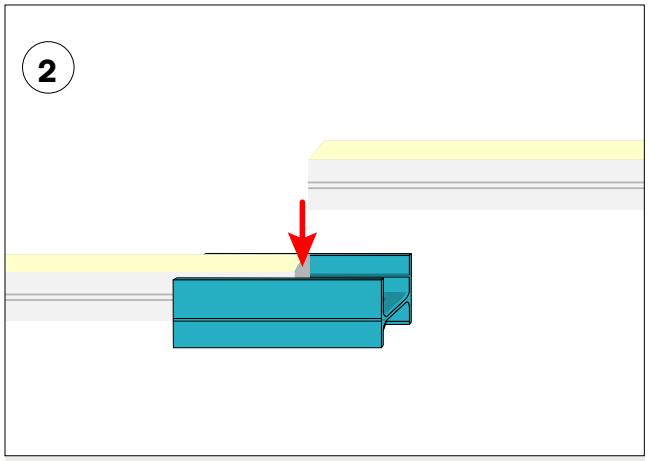

Press fixture into mounted PPS channel.

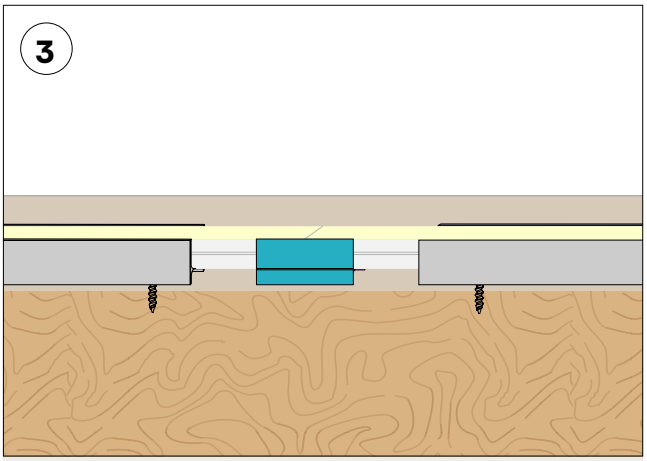

Finished assembly for end feed mounting

© 2026 QTL. All rights reserved | 155 Hill St. Milford, CT 06460 | 203-367-8777 | sales@QTL.lighting | QTL.lighting

SEAMLESS MOUNTING METHOD: **PPS-96**

- Support two seamless fixtures, with or without wire exit
- 96" (PPS-96)
- Built in wireway

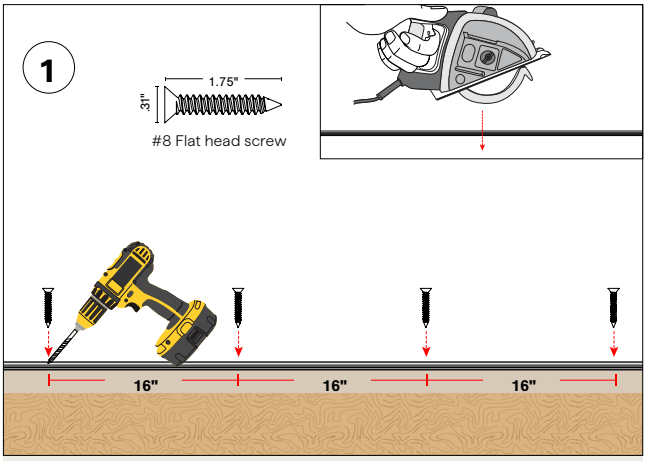

The PPS-BRACKET can be field cuttable and cut to whatever length your application requires. The PPS-BRACKET can be installed as a full length of 96", multiple smaller pieces, or end to end for longer seamless runs.

Using pre-drilled pilot holes screw the #8 flat head screws to mount the PPS-BRACKET (1 screw every 16").

NOTE: For drywall applications mount directly into a stud.

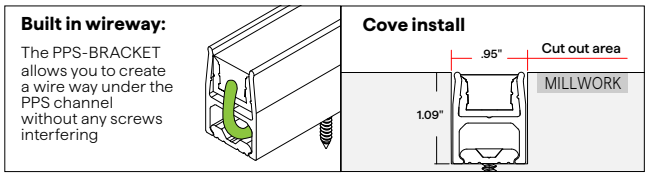

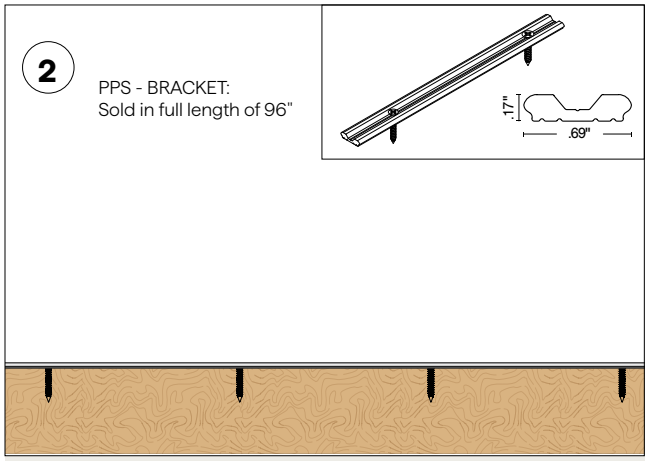

Using pre-drilled pilot holes, use the #8 flat head screws to mount the PPS-BRACKET.

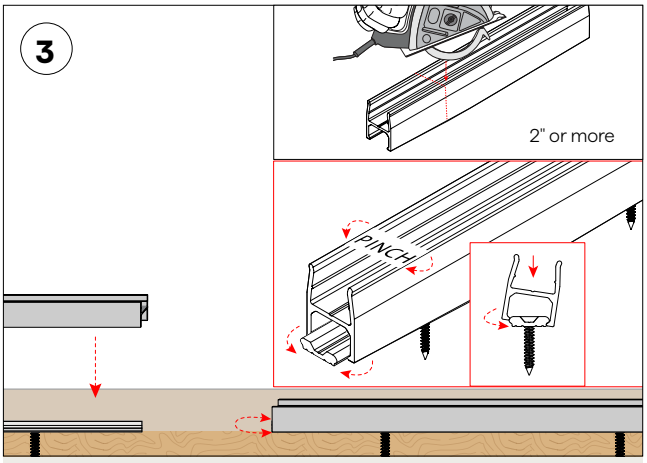

To mount, pinch the upper half of the PPS-96 while you pivot it around one side of the PPS-BRACKET and push-in until you hear it snap into place. PPS-FT flexes around the PPS-BRACKET to create a solid, and secure snap on connection.

© 2026 QTL. All rights reserved | 155 Hill St. Milford, CT 06460 | 203-367-8777 | sales@QTL.lighting | QTL.lighting

SEAMLESS MOUNTING METHOD: **PPS-LP-96**

- Support two fixtures, without built-in wireway
- 96" (PPS-LP-96) low profile PVC mount channel

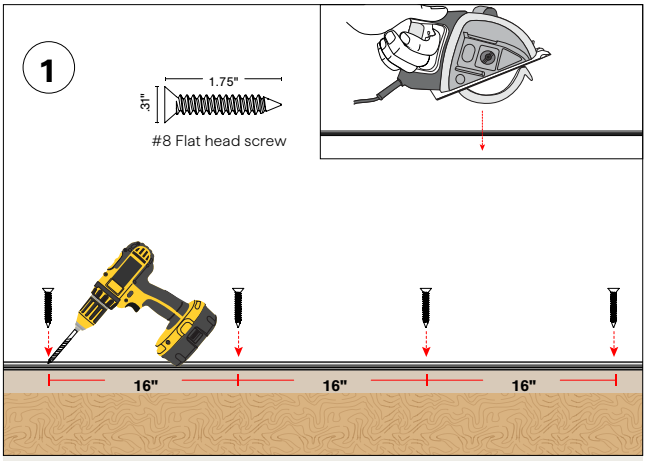

The PPS-BRACKET can be field cuttable and cut to whatever length your application requires. The PPS-BRACKET can be installed as a full length of 96", multiple smaller pieces, or end to end for longer seamless runs.

Using pre-drilled pilot holes screw the #8 flat head screws to mount the PPS-BRACKET (1 screw every 16").

NOTE: For drywall applications mount directly into a stud.

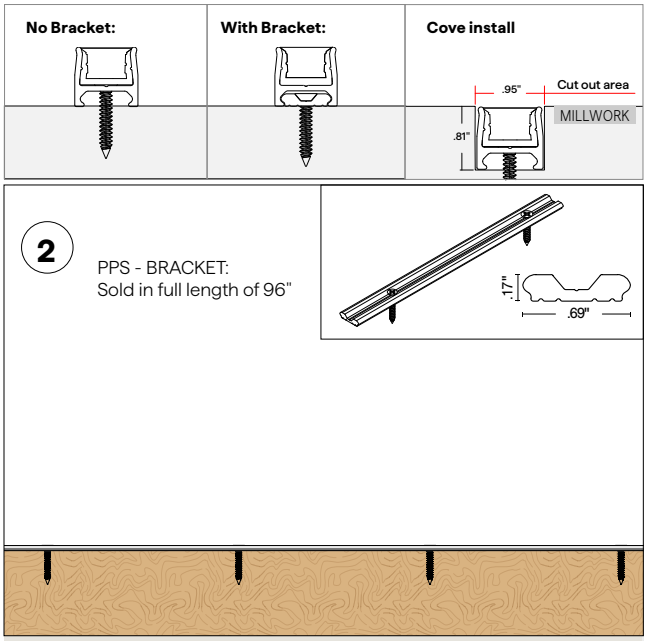

Using pre-drilled pilot holes, use the #8 flat head screws to mount the PPS-BRACKET.

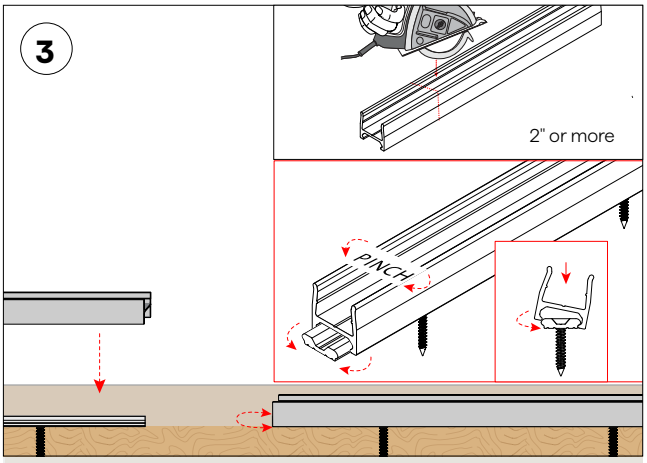

To mount, pinch the upper half of the PPS-LP-96 while you pivot it around one side of the PPS-BRACKET and push-in until you hear it snap into place. The PPS-LP-96 flexes around the PPS-BRACKET to create a solid, and secure snap on connection.

© 2026 QTL. All rights reserved | 155 Hill St. Milford, CT 06460 | 203-367-8777 | sales@QTL.lighting | QTL.lighting

Q-CAP BOXA-RGBW

Flexible Fixtures Color Data

BOXA-RGBW-DRY-R-6.0-ENC/CL

0 K

CRI: 0.0

CRI R9: 0.0

TM30 Rf: 0.0

TM30 Rg: 0.0

CQS: 0.0

X: 0.622

Y: 0.289

U: 0.476

V: 0.332

Δuv: n/a

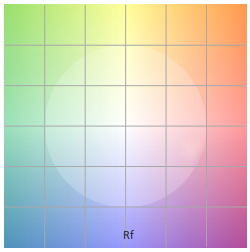

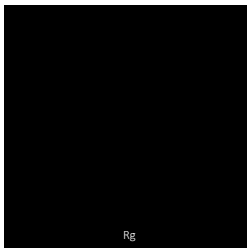

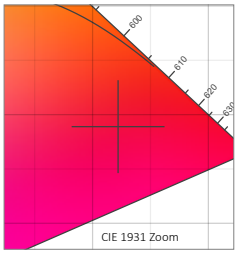

R1	R2	R3	R4	R5	R6	R7	R8	R9	R10	R11	R12	R13	R14	R15
0.0	0.0	0.0	0.0	0.0	0.0	0.0	0.0	0.0	0.0	0.0	0.0	0.0	0.0	0.0
Q1	**Q2**	**Q3**	**Q4**	**Q5**	**Q6**	**Q7**	**Q8**	**Q9**	**Q10**	**Q11**	**Q12**	**Q13**	**Q14**	**Q15**
0.0	0.0	0.0	0.0	0.0	0.0	0.0	0.0	0.0	0.0	0.0	0.0	0.0	0.0	0.0
C1	**C2**	**C3**	**C4**	**C5**	**C6**	**C7**	**C8**	**C9**	**C10**	**C11**	**C12**	**C13**	**C14**	**C15**	**C16**
0.0	0.0	0.0	0.0	0.0	0.0	0.0	0.0	0.0	0.0	0.0	0.0	0.0	0.0	0.0	0.0

TM30

Hue Bin	R_f	Chroma	Hue
1	0	0%	0%
2	0	0%	0%
3	0	0%	0%
4	0	0%	0%
5	0	0%	0%
6	0	0%	0%
7	0	0%	0%
8	0	0%	0%
9	0	0%	0%
10	0	0%	0%
11	0	0%	0%
12	0	0%	0%
13	0	0%	0%
14	0	0%	0%
15	0	0%	0%
16	0	0%	0%

BOXA-RGBW-DRY-G-6.0-ENC/CL

0 K

CRI: 0.0

CRI R9: 0.0

TM30 Rf: 0.0

TM30 Rg: 0.0

CQS: 0.0

X: 0.139

Y: 0.683

U: 0.051

V: 0.375

Δuv: n/a

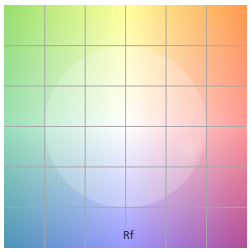

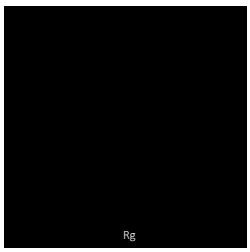

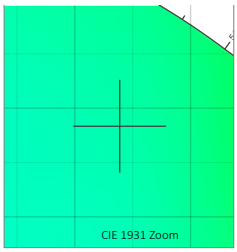

R1	R2	R3	R4	R5	R6	R7	R8	R9	R10	R11	R12	R13	R14	R15
0.0	0.0	0.0	0.0	0.0	0.0	0.0	0.0	0.0	0.0	0.0	0.0	0.0	0.0	0.0
Q1	**Q2**	**Q3**	**Q4**	**Q5**	**Q6**	**Q7**	**Q8**	**Q9**	**Q10**	**Q11**	**Q12**	**Q13**	**Q14**	**Q15**
0.0	0.0	0.0	0.0	0.0	0.0	0.0	0.0	0.0	0.0	0.0	0.0	0.0	0.0	0.0
C1	**C2**	**C3**	**C4**	**C5**	**C6**	**C7**	**C8**	**C9**	**C10**	**C11**	**C12**	**C13**	**C14**	**C15**	**C16**
0.0	0.0	0.0	0.0	0.0	0.0	0.0	0.0	0.0	0.0	0.0	0.0	0.0	0.0	0.0	0.0

TM30

Hue Bin	R_f	Chroma	Hue
1	0	0%	0%
2	0	0%	0%
3	0	0%	0%
4	0	0%	0%
5	0	0%	0%
6	0	0%	0%
7	0	0%	0%
8	0	0%	0%
9	0	0%	0%
10	0	0%	0%
11	0	0%	0%
12	0	0%	0%
13	0	0%	0%
14	0	0%	0%
15	0	0%	0%
16	0	0%	0%

BOXA-RGBW-DRY-GB-6.0-ENC/CL

0 K

CRI: 0.0

CRI R9: 0.0

TM30 Rf: 0.0

TM30 Rg: 0.0

CQS: 0.0

X: 0.142

Y: 0.069

U: 0.160

V: 0.116

Δuv: n/a

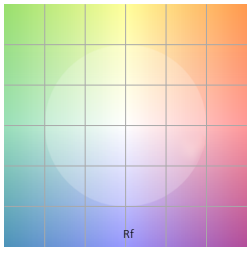

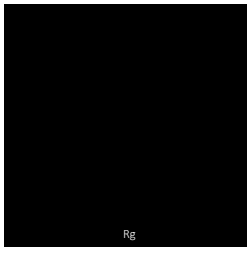

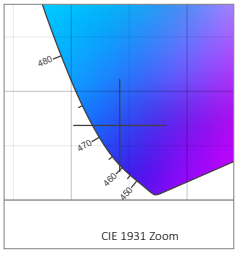

R1	R2	R3	R4	R5	R6	R7	R8	R9	R10	R11	R12	R13	R14	R15
0.0	0.0	0.0	0.0	0.0	0.0	0.0	0.0	0.0	0.0	0.0	0.0	0.0	0.0	0.0
Q1	**Q2**	**Q3**	**Q4**	**Q5**	**Q6**	**Q7**	**Q8**	**Q9**	**Q10**	**Q11**	**Q12**	**Q13**	**Q14**	**Q15**
0.0	0.0	0.0	0.0	0.0	0.0	0.0	0.0	0.0	0.0	0.0	0.0	0.0	0.0	0.0
C1	**C2**	**C3**	**C4**	**C5**	**C6**	**C7**	**C8**	**C9**	**C10**	**C11**	**C12**	**C13**	**C14**	**C15**	**C16**
0.0	0.0	0.0	0.0	0.0	0.0	0.0	0.0	0.0	0.0	0.0	0.0	0.0	0.0	0.0	0.0

TM30

Hue Bin	R_f	Chroma	Hue
1	0	0%	0%
2	0	0%	0%
3	0	0%	0%
4	0	0%	0%
5	0	0%	0%
6	0	0%	0%
7	0	0%	0%
8	0	0%	0%
9	0	0%	0%
10	0	0%	0%
11	0	0%	0%
12	0	0%	0%
13	0	0%	0%
14	0	0%	0%
15	0	0%	0%
16	0	0%	0%

NOTES:
- CRI R values, only R1-R8 are used to calculate RA CRI values
- TM30 C values, 16 binned values out of total of 99 C values
- CQS Q values
- Data subject to change, all data has +/- 5% tolerance

© 2024 QTL. All rights reserved | 155 Hill St. Milford, CT 06460 | 203-367-8777 | sales@QTL.lighting | QTL.lighting

Specification subject to change. Rev-03-10-24

Q-CAP BOXA-RGBW

Flexible Fixtures Color Data

BOXA-RGBW-DRY-RGBW-27-6.0-ENC/CL

2810 K

CRI: 93.3

CRI R9: 73.4

TM30 Rf: 88.0

TM30 Rg: 105.2

CQS: 86.2

X: 0.439

Y: 0.385

U: 0.260

V: 0.343

Δuv: -0.0079

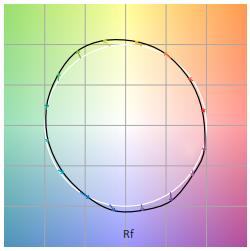



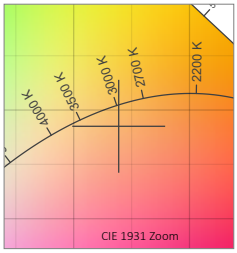

R1	R2	R3	R4	R5	R6	R7	R8	R9	R10	R11	R12	R13	R14	R15
95.8	96.7	94.2	92.1	94.6	94.2	91.7	87.2	73.4	90.0	91.5	82.0	96.4	95.6	94.9
Q1	**Q2**	**Q3**	**Q4**	**Q5**	**Q6**	**Q7**	**Q8**	**Q9**	**Q10**	**Q11**	**Q12**	**Q13**	**Q14**	**Q15**
88.2	96.8	79.8	82.0	88.5	85.6	79.4	85.9	95.8	87.2	85.8	86.0	88.1	89.9	89.3
C1	**C2**	**C3**	**C4**	**C5**	**C6**	**C7**	**C8**	**C9**	**C10**	**C11**	**C12**	**C13**	**C14**	**C15**	**C16**
92.6	90.7	81.2	86.0	88.4	85.9	87.3	89.9	94.0	89.2	83.2	84.6	90.5	87.6	90.0	85.9

TM30			
Hue Bin	R_f	Chroma	Hue
1	93	-4%	-1%
2	91	-3%	4%
3	81	1%	10%
4	86	4%	8%
5	88	8%	6%
6	86	10%	-2%
7	87	4%	-7%
8	90	0%	-7%
9	94	-2%	-1%
10	89	-3%	6%
11	83	0%	12%
12	85	6%	7%
13	90	7%	0%
14	88	9%	-5%
15	90	3%	-5%
16	86	1%	-11%

BOXA-RGBW-DRY-RGBW-30-6.0-ENC/CL

3128 K

CRI: 92.2

CRI R9: 68.7

TM30 Rf: 91.2

TM30 Rg: 101.3

CQS: 90.6

X: 0.430

Y: 0.405

U: 0.246

V: 0.347

Δuv: 0.0015

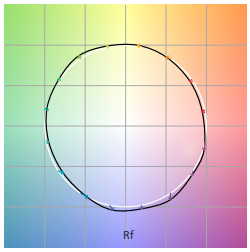

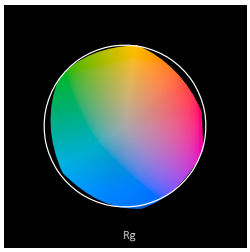

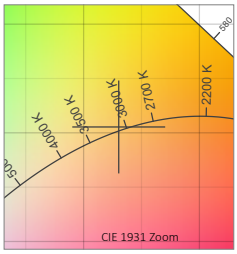

R1	R2	R3	R4	R5	R6	R7	R8	R9	R10	R11	R12	R13	R14	R15
93.2	93.3	91.5	93.8	91.6	90.5	95.2	88.2	68.7	82.6	93.6	73.1	92.9	94.3	90.5
Q1	**Q2**	**Q3**	**Q4**	**Q5**	**Q6**	**Q7**	**Q8**	**Q9**	**Q10**	**Q11**	**Q12**	**Q13**	**Q14**	**Q15**
91.2	97.5	85.1	86.7	90.2	89.2	88.8	93.3	95.4	91.7	92.4	93.4	94.1	89.5	89.9
C1	**C2**	**C3**	**C4**	**C5**	**C6**	**C7**	**C8**	**C9**	**C10**	**C11**	**C12**	**C13**	**C14**	**C15**	**C16**
92.5	93.4	88.8	91.9	92.6	92.9	93.2	95.5	94.7	88.6	85.0	89.6	93.5	90.1	90.7	87.5

TM30			
Hue Bin	R_f	Chroma	Hue
1	93	-4%	-1%
2	93	-3%	2%
3	89	-1%	6%
4	92	1%	5%
5	93	1%	4%
6	93	4%	0%
7	93	1%	-4%
8	96	0%	-3%
9	95	-3%	0%
10	89	-4%	5%
11	85	-1%	10%
12	90	5%	5%
13	93	4%	0%
14	90	6%	-4%
15	91	2%	-6%
16	87	1%	-10%

NOTES:
- CRI R values, only R1-R8 are used to calculate RA CRI values
- TM30 C values, 16 binned values out of total of 99 C values
- CQS Q values
- Data subject to change, all data has +/- 5% tolerance

© 2024 QTL. All rights reserved | 155 Hill St. Milford, CT 06460 | 203-367-8777 | sales@QTL.lighting | QTL.lighting

Specification subject to change. Rev-03-10-24

MATERIAL RECYCLING

Q-CAP FLEXIBLE FIXTURES

You may be done with your products, but chances are they still have more to give. Follow these instructions to break down and sort recyclable components. Check with local recycling collection to ensure they accept the materials listed below.

Additionally, Q-Tran offers a Takeback Program. Contact factory for information.

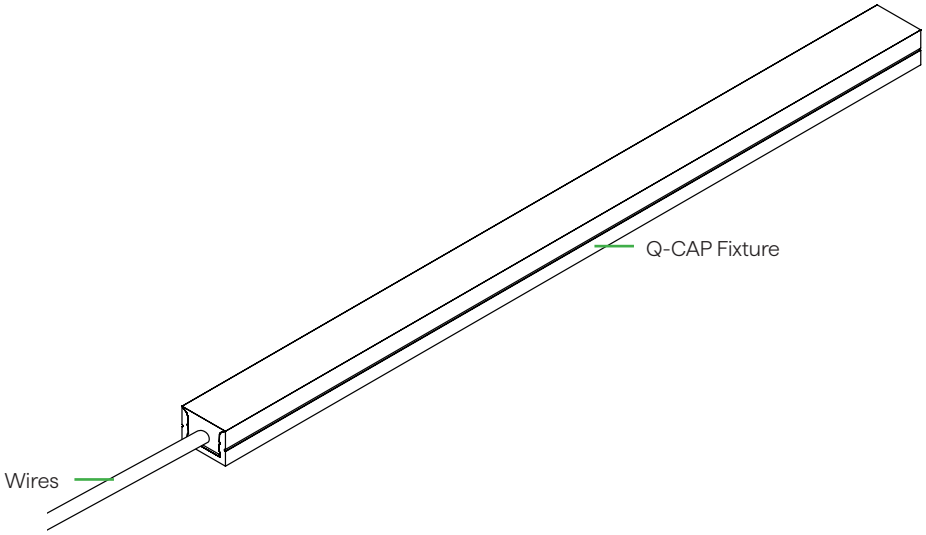

E

Q-CAP Fixture
Wires

© 2024 QTL. All rights reserved | 155 Hill St. Milford, CT 06460 | 203-367-8777 | sales@QTL.lighting | QTL.lighting